PoWer MIG Series

GeKaMac®

# PoWer MIG GPS
# WB 400 AC DC

## Users Manual

Please Read and Understand This Manual
Before Operating The Welding Machine

www.gedikwelding.com

# Forward

Thank you for your purchase of Gedik's welding power source.

This Owner's Manual (hereafter referred to as "this manual") explains the following points for safe use of the product.

- Caution regarding the product
- Welding operation/setting method
- Daily maintenance (cleaning, inspection)
- Troubleshooting

Store this manual in a safe place so that it can be referred whenever necessary.

# Important Information

## Use of the Product

This product is a power supply unit designed and manufactured for use in arc welding.

Do not use the product for any other purposes.

## Safe Use of the Product

For safe use of the product (hereafter referred to as welding power source), ensure to follow the instructions below:

- This manual is intended for workers who are familiar with the listed terminologies. If this product is going to be operated or serviced by workers who are not familiar with the terminology, the responsibility falls on the customer to provide thorough training on operation and safety.
- This equipment and this manual are for use only by persons trained and experienced in the safety operation of welding equipment. Untrained persons must complete the "Special workshop for arc welding".
- For protection from possible injury or damage in the equipment, be sure to read and follow the safety information in this manual. Do not use it for purposes not indicated in the manual.
- Make sure that installation/operation/maintenance of the welding power source and welding machine is performed by a qualified personnel with sufficient knowledge and skills.
- If this manual is lost or damaged, immediately contact your dealer.

## Copyright

This manual is copyrighted, and all rights are reserved by Gedik Welding. Any part of the manual shall not becopied, photocopied, or reproduced without the prior consent of Gedik Welding.

## When Exporting the Product

The following conditions are to be observed and met when exporting the product outside of the country.

- The product is designed and manufactured according to the Japanese laws/specification and industrial standards. The product may not conform to laws/specification and standards in other countries.
- When shipping or reselling the product outside of the country, make sure to contact our distributor or customer service in advance.

## Disposal of the Product

For disposal of welding equipment including the welding power source and welding material, confirm the regulation of the country / region in which the equipment is located and follow the rules. When disposing, arrange consignment contract for waste disposal with an authorized waste collectors and manage the disposal processes.

## Service and Support

See the back cover for contact numbers and mailing addresses. When contacting your dealer for service, you are required to provide the following information:

- Name, address, telephone number
- Product model, manufacture year, serial number, and software version number
  (Refer to the diagram below for product information. Attachment location and content of nameplate may vary depending on the purchased product.)

<Example> Attachment location of the nameplate

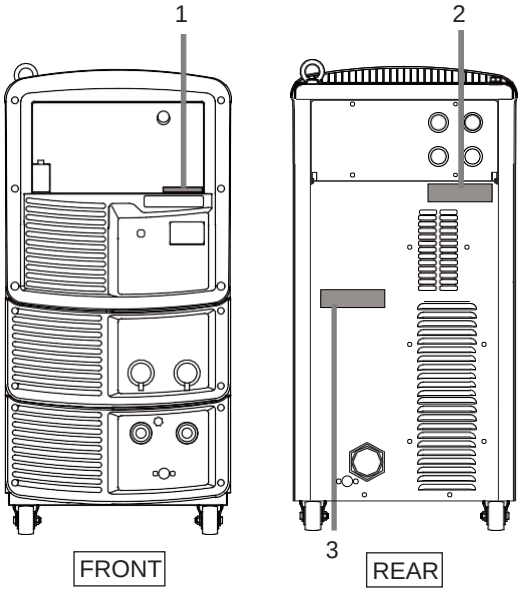


| No. | Serial No. |
|---|---|
| 1 | • (Same number as the nameplate in the rear)<br>#X#####X ########### |
| 2 | • Product model XX-X###X<br>• Manufacture year #### year<br>• Serial number #X#####X ########### |
| 3 | • Software version number<br>X##### Ver ###.###.###.### |

# TABLE OF CONTENTS

**Forward** ..... i
**Important Information** ..... ii
Use of the Product ..... ii
Safe Use of the Product ..... ii
Copyright ..... ii
When Exporting the Product ..... ii
Disposal of the Product ..... ii
Service and Support ..... iii

## CHAPTER 1 SAFETY INFORMATION

**1.1 Warning Symbols** ..... 1-1
**1.2 Safety Precaution** ..... 1-2
1.2.1 Operating precautions ..... 1-2
1.2.2 Precautions for power supply and electric shock ..... 1-3
1.2.3 Precautions for air discharge and use of respiratory protective equipment ..... 1-4
1.2.4 Precautions for flammable materials ..... 1-5
1.2.5 Precautions for gas cylinder and gas regulator. ..... 1-6
1.2.6 Precautions for handling of plastic parts ..... 1-6
1.2.7 Precautions for disassembling and modifying the welding power source ..... 1-7
1.2.8 Precaution for protective equipment ..... 1-7
1.2.9 Precautions for rotating part ..... 1-7
**1.3 Principal Safety Standards** ..... 1-8

## CHAPTER 2 PRODUCT SPECIFICATION AND CONFIGURATION

**2.1 Specification** ..... 2-1
2.1.1 Specifications. ..... 2-1
2.1.2 Applicable welding method ..... 2-2
2.1.3 External dimensions ..... 2-3
2.1.4 Rated duty cycle ..... 2-4
**2.2 Product Configuration** ..... 2-5
2.2.1 Standard composition ..... 2-5
2.2.2 Accessory (not supplied) ..... 2-8
2.2.3 Optional accessories ..... 2-8
**2.3 Part Names** ..... 2-10
2.3.1 Front panel ..... 2-10
2.3.2 Rear panel ..... 2-11

## CHAPTER 3 TRANSPORTATION AND INSTALLATION

**3.1 Required Equipment** ..... 3-1
3.1.1 Welding power source equipment ..... 3-1
3.1.2 Ventilation equipment/partial exhaust facility ..... 3-2
**3.2 Installation Environment** ..... 3-3
3.2.1 Installation environment ..... 3-3
3.2.2 Electromagnetic interference ..... 3-3
**3.3 Transportation Procedure** ..... 3-4
3.3.1 Transportation with lifting lug ..... 3-5
3.3.2 Manual transportation with carts ..... 3-6

## CHAPTER 4 CONNECTION

**4.1 Precautions for Connection Procedure and Grounding** ..... 4-1
**4.2 Connecting the Welding Power Source** ..... 4-2
4.2.1 Connection of cable at output side ..... 4-3
4.2.2 Connection of wire feeder ..... 4-4
4.2.3 Connection of welding torch ..... 4-5
4.2.4 Connection of voltage detection cable (Voltage detection cable is used) ..... 4-6
4.2.5 Connection at TIG welding ..... 4-10
4.2.6 Connection at DC STICK welding ..... 4-11
4.2.7 Connection of water hose with cooling water circulation device (when using the water-cooled welding torch) ..... 4-11
4.2.8 Connection of shielding gas ..... 4-13
**4.3 Grounding and Connection of Input Power Supply** ..... 4-14
**4.4 Confirmation of Connection** ..... 4-15
**4.5 Connection of External Equipment** ..... 4-15
4.5.1 Connection of automatic machine ..... 4-17
**4.6 Wiring of Voltage Detection Cable at Base Metal Side** ..... 4-20
4.6.1 Wiring to wire feeder ..... 4-20
4.6.2 Wiring to welding power source ..... 4-21
4.6.3 Wiring example of voltage detection cable ..... 4-22

## CHAPTER 5 WELDING OPERATION

**5.1 Precaution at Welding Operation** ..... 5-1
5.1.1 Precautions for air discharge and use of respiratory protective equipment ..... 5-1
5.1.2 Precaution for protective equipment ..... 5-2
5.1.3 Precautions on welding place ..... 5-2
**5.2 Check before Welding** ..... 5-2
**5.3 Power ON and Gas Supply** ..... 5-4
**5.4 Wire Inching** ..... 5-5
**5.5 Check and Setting of Welding Condition** ..... 5-6
5.5.1 Reading welding condition ..... 5-6
5.5.2 Preventing erroneous operation on operation panel ..... 5-6
**5.6 Performing Welding Operation** ..... 5-7
5.6.1 Operation of welding start ..... 5-7
5.6.2 Operation during welding ..... 5-8
5.6.3 Operation at welding end ..... 5-10

## CHAPTER 6 WELDING CONDITION

**6.1 List of Welding Conditions** ..... 6-1
6.1.1 Parameter (Welding parameter) ..... 6-1
6.1.2 Function ..... 6-1
6.1.3 Internal function ..... 6-2
**6.2 Function on Operation Panel** ..... 6-6

**6.3 Welding Conditions ..... 6-8**
6.3.1 Basic welding conditions..... 6-8
6.3.2 Useful functions ..... 6-8
**6.4 Preparing Welding Conditions ..... 6-9**
**6.5 Memory Function of Welding Conditions ..... 6-9**
6.5.1 Memory registration of welding conditions ..... 6-10
6.5.2 Read out of welding conditions ..... 6-11
6.5.3 Deletion of memory registration ..... 6-12
**6.6 Setting Welding Conditions..... 6-13**
6.6.1 Welding mode setting ..... 6-13
6.6.2 Setting welding parameter ..... 6-15
6.6.3 Crater setting ..... 6-17
6.6.4 Arc spot time..... 6-22
6.6.5 Welding voltage adjustment..... 6-22
6.6.6 Arc characteristics adjustment ..... 6-23
6.6.7 EN ratio..... 6-23
6.6.8 Adjustment of wave frequency..... 6-24
**6.7 Setting Internal Functions ..... 6-27**
6.7.1 Setting procedure ..... 6-27
6.7.2 Detailed information on internal functions ..... 6-28
**6.8 Operation of Analog Remote Control (Optional)..... 6-49**

## CHAPTER 7 .ADMINISTRATOR FUNCTIONS

**7.1 Protection of Welding Conditions..... 7-1**
7.1.1 Setting/Changing password..... 7-1
7.1.2 Disabling erroneous operation prevention ..... 7-3
**7.2 Welding Result Control Function..... 7-4**
7.2.1 Setting welding result control function ..... 7-4
7.2.2 Details of welding control items ..... 7-5
**7.3 Data Backup (Utilization of data) ..... 7-9**

## CHAPTER 8 .MAINTENANCE AND INSPECTION

**8.1 Precautions for Maintenance and Inspection 8-1**
**8.2 Daily Inspection ..... 8-3**
**8.3 Periodical Inspection ..... 8-4**
**8.4 Periodical Replacement Parts ..... 8-5**
**8.5 Insulation Resistance Measurement and Withstand Voltage Test..... 8-5**

## CHAPTER 9 TROUBLESHOOTING

**9.1 Action in Case of Error..... 9-1**
**9.2 Troubleshooting ..... 9-4**

## CHAPTER 10REFERENCE MATERIALS

**10.1 Parts List ..... 10-1**
**10.2 Reference Drawing ..... 10-3**
10.2.1 Schematic diagram ..... 10-4
10.2.2 Parts layout drawing ..... 10-6
**10.3 Materials for Setting Welding Conditions ..... 10-7**
10.3.1 Guide for changing welding conditions..... 10-7
10.3.2 Samples of welding condition settings ..... 10-7

# Chapter 1 Safety Information



This chapter explains the precautions on the welding power source and welding operation.

## 1.1 Warning Symbols

The following safety warning symbols and signs are used throughout the manual to ensure proper operation of the product and to prevent from various hazards that cause serious injury and damages. Indication and explanation for the symbols are as follows:
Make sure to fully understand the content before beginning operation.

The below symbols are categorized by the degree of possible hazard and damage.

| Symbols | Explanation |
|---|---|
| ⚠ WARNING | Gives information regarding possible personal injury or loss of life if the product is used improperly. |
| ⚠ CAUTION | Refers to minor personal injury or possible equipment damage if the product is used improperly. |

The below symbols are categorized according to the content to be followed.

| Symbols | Explanation |
|---|---|
| ❗ | Instruction: indicates "Instruction" matters to be followed. |
| ⃠ | Prohibited: indicates "Prohibited" matters. |

# 1.2 Safety Precaution

This section explains the safety precautions regarding operation of the welding power source.

## 1.2.1 Operating precautions

To prevent serious injury or accidents, ensure to follow the instructions below:

**⚠ WARNING**

- **Be sure to read and understand the information in the manual before operating the product. Have only trained and experienced personnel perform operation of welding power source or welding machine.**
- **Perform construction work on primary power source in the facility, selection of installation space, operation/storage/piping of high-pressure gas, storage of welded products, and disposal of waste in accordance with local law and/or regulation at the customer's facility.**
- **Be sure to take appropriate measures during welding so that no person is allowed unauthorized access near the welding machine or work areas.**
- **Only authorized personnel or person with full understanding and experience of the welding machine must perform installation, maintenance and repair of welding machine.**
- **Make sure to attach a safety belt when working at high locations.**
- **For those with pacemaker, avoid being close to the machine during operation or work area until obtaining physician's approval. Machine at operation will generate magnetic field nearby that may cause influence upon the working of pacemaker.**
- **Do not use the welding power source for purpose other than welding such as thawing a frozen pipe.**
- **Do not use the welding power source when the case and the cover are removed.**
- **Removing the cases for maintenance, inspection or repair should be performed by qualified persons or persons familiar with the welding machine. Also put up a barrier around the welding machine or take other necessary measure to prevent other people from getting in the nearby area.**

## 1.2.2 Precautions for power supply and electric shock

To prevent electric shock or burn injury, ensure to follow the instructions below:

**⚠ WARNING**

- Do not touch the input and output terminals and the internal live electrical parts of the welding power source.
- Have a qualified electrical engineer ground the case of the welding power source and base metal or jig electrically connected in accordance with local regulation.
- Before starting maintenance and inspection, make sure to cut the input power with the disconnect switch in the box connected with the welding power source and wait three minutes or more.
  The capacitors may be still charged even after the input power is cut. Make sure that there is no charged voltage before starting the work.
- Wear dry insulating gloves for protection. Do not use damaged or wet gloves.
- Tighten all cable connections and insulate them.
- Do not wrap cables around the body.
- Perform periodical maintenance and repair damaged parts if any before use.
- Turn off POWER switch of all the related equipment when not in use.
- Periodically blow the parts of welding power source with dry compressed air to remove dust.
  Powder dust accumulating inside may cause insulation deterioration, resulting in electric shock or fire.
- Do not use a cable with insufficient capacity, serious damage or cable without grounding.

**⚠ CAUTION**

- When the power switch is tripped, never turn it on again and contact your dealer.

### 1.2.3 Precautions for air discharge and use of respiratory protective equipment

To prevent suffocation or gas poisoning in the welding operation, ensure to follow the instructions below:

**⚠ WARNING**

- When welding is required in tank, boiler, reaction tower, or hold of a ship, closed space, or any other places of poor ventilation, ensure to provide ventilation equipment.
- Gas of larger gravity than that of oxygen, such as carbon dioxide gas or argon gas, retains at the bottom part.
  To prevent anoxia due to the retention gas, provide ventilation equipment.
- When it is difficult to provide ventilation equipment or the ventilation equipment does not give sufficient performance, ensure to use respiratory protective equipment.
  For preventive measure from falling due to anoxia, apply lifelines such as a safety belt.
- For the welding operation in a narrow space, perform the operation with the trained supervisor.
- Periodically inspect the ventilation equipment to ensure correct and proper performance of ventilation.

To prevent any health damage due to poisonous gas or particle substances (fume) emitted in the welding operation, ensure to follow the precautions below:

**⚠ WARNING**

- To reduce the dust concentration, install a partial exhaust facility such as fume suction device, or install the collective ventilation equipment.
- When it is difficult to provide a partial exhaust facility or the ventilation or exhaust facility does not give sufficient performance, ensure to use the respiratory protective equipment.
- In performing welding or cutting the coating steel plate or galvanized steel sheet, provide a partial exhaust facility or let the welding operator as well as the surrounding operators use respiratory protective equipment. (Welding or cutting the coating steel plate or galvanized steel sheet will cause toxic gas or fume.)
- Do not perform welding operation in the vicinity of degreasing, cleansing, or spraying operation. Performing the welding operation in such places may generate poisonous gas.

## 1.2.4 Precautions for flammable materials

To prevent fire, explosion and rupture, ensure to follow the instructions below:

**⚠ WARNING**

- Remove all flammables within 10 m (33 ft) of the welding arc so that sparks and spatter do not strike flammable materials. If this is not possible, tightly cover them with noncombustible covers.
- When welding on a ceiling, floor, bulkhead or partition, remove all flammable materials in hidden places.
- Tighten all cable connections and insulate them.
  Loose connection in the cable and current path of the base metal such as steel frame may cause electric shocks and fire hazards from energization.
- Connect power cable for base metal as close to the welding area as possible.
- Do not weld on gas pipe and closed containers such as tanks or drums.
- Performing arc welding on flammable object such as fuel tank may cause explosion. Furthermore, welding on closed container such as tanks and pipes may cause burst.
- Watch for fire and keep a fire extinguisher near the welding area.
- Periodically blow the parts of welding power source with dry compressed air to remove dust.
  Powder dust accumulating inside may cause insulation deterioration, resulting in electric shock or fire.
- Do not place hot base metal after welding near flammable materials.
  Spatter and hot base metal after welding can cause fire.
- Do not place the welding power source near combustible materials or flammable gas.
- Do not place the welding torch near the wire feeder or the frame of wire reel stand.
- When there is an electrical connection between a workpiece and the frame of wire feeder or the wire reel stand, arc may be generated and cause damage by a fire if the wire contacts the frame or the workpiece.

## 1.2.5 Precautions for gas cylinder and gas regulator

To prevent falling of gas cylinder, gas regulator explosion and accident caused by gas, ensure to follow the instructions below:

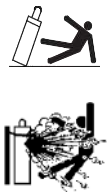

**⚠ WARNING**

- Use only correct shielding gas cylinders according to the related laws, regulations and customer's standard.
  Gas cylinder contains compressed gas. Wrong operation may cause gas explosion, resulting in serious physical injury.
- Read and follow instructions on compressed gas cylinders, associated equipment, and the CGA publication P-1 listed in PRINCIPAL SAFETY STANDARDS.
- Keep the cylinder upright and securely chained to a stationary support or a rack.
  Falling or tipping of cylinder may cause serious injury.
  In opening the valve of gas cylinder, keep your face away from the gas discharge port.
- Keep protective cap in place over valve except when gas cylinder is in use or connected for use.
- Do not place the gas cylinder under high temperature.
- Protect compressed gas cylinders from excessive heat, mechanical shock, and arcs.
- Do not set welding torch to the cylinder or touch the cylinder with welding electrode.
- For the gas regulator, make sure to use a device for compressed gas cylinder that conforms to the specific application of the shielding gas.
  Using an inappropriate gas regulator may cause explosion.

## 1.2.6 Precautions for handling of plastic parts

Front and rear panel of the welding power source is made from polycarbonate resin. To prevent from electric shock or fire caused by the damage on polycarbonate resin, ensure to follow the instructions below.

**⚠ WARNING**

- Do not apply external force or shock to the front and rear panels.
  Otherwise, damage and malfunction may occur.
- If there is dirt on plastic parts, soak a soft cloth in water, alcohol or neutral detergent, wring it well and wipe off the dirt.
  Do not use organic detergent or chemical agent. Doing so may cause crack (breaking) and degrade the strength.
- If there is any abnormality in the plastic parts such as front and rear panels, immediately stop the use and contact your dealer.
- Do not use the welding power source at location in which organic solvent, chemicals, cutting oil and composition oil adhere or atmosphere containing the above.
  Doing so may cause crack (breaking) and deterioration in the plastic part.

### 1.2.7 Precautions for disassembling and modifying the welding power source

To prevent electrical shock, fire, injury from malfunction and error in the welding power source, ensure to follow the precautions below:

**⚠ WARNING**

- **Do not disassemble/modify the welding power source.**
  **Disassembling/modifying by customer is out of the warranty scope.**

### 1.2.8 Precaution for protective equipment

For protection from arc ray generated from welding, spattering dross and hearing disorder from noise, observe the following:

**⚠ WARNING**

- **When welding or watching a welder work, wear face shield with a proper shade of filter (See ANSI Z 49.1 listed in PRINCIPAL SAFETY STANDARDS) to protect the face and eyes.**
- **Wear safety goggles in the work area and the surrounding.**
  **Ignoring the above may cause injury in the eye or burn from spatter and spattering dross.**
- **Wear protective equipment such as protective leather gloves, long-sleeve clothes, leg covers, and leather apron.**
  **Ignoring the above may cause electrical shock and burn.**
- **Install protective screens or barriers to protect the eyes of others in the work area from arc ray.**
- **Wear an ear protector when noise level is high.**
  **Ignoring the above may cause hearing disorder.**

### 1.2.9 Precautions for rotating part

To prevent being caught/pinched by the rotating parts, ensure to follow the instructions below:

**⚠ WARNING**

- **Keep your hands, fingers, hairs and clothes away from the rotating cooling fan, open parts around the cooling fan and feed roll of the wire feeder.**

# 1.3 Principal Safety Standards

Arc welding equipment – Installation and use, Technical Specification
IEC 62081, from International Electro technical Commission

Arc welding equipment Part 1: Welding power sources IEC 60974-1, from International Electro technical Commission

Safety in Welding and Cutting, ANSI Standard Z49.1, from American Welding Society.
Safety and Health Standards, OSHA 29 CFR 1910, from Superintendent of Documents, U.S. Government Printing Office.

Recommended Practices for Plasma Arc Cutting, American Welding Society Standard AWS C5.2, from American Welding Society.

Recommended Safe Practices for the Preparation for Welding and Cutting of Containers That Have Held Hazardous Substances, American Welding Society Standard AWS F4.1, from American Welding Society.

National Electrical Code, NFPA Standard 70, from National Fire Protection Association. Safe Handling of Compressed Gases in Cylinders, CGA Pamphlet P-1, from Compressed Gas Association.

Code for Safety in Welding and Cutting, CSA Standard W117.2, from Canadian Standards Association, Standards Sales.

Safe Practices For Occupation And Educational Eye And Face Protection, ANSI Standard Z87.1, from American National Standards Institute.

Cutting And Welding Processes, NFPA Standard 51B, from National Fire Protection Association.

**NOTE**

- **The codes listed above may be improved or eliminated. Always refer to the updated codes.**

# Chapter 2 Product Specification and Configuration

This chapter explains the specification, name of each parts and configuration of the welding power source.

## 2.1 Specification

This section explains the specification and external dimension of the welding power source.

### 2.1.1 Specifications

This section explains the specification of the welding power source.

| Specification/Model | PoWer MIG GPS WB 400 AC / DC |
|---|---|
| Model | PoWer MIG GPS WB 400 AC / DC |
| Number of phase | Three phase |
| Rated frequency | 50/60 Hz |
| Rated input voltage | 460 V |
| Input voltage range | 460 V ± 10 % |
| Rated input | 19.4kVA, 14.8kW |
| Rated input current | 24.4 A |
| Rated output current | 400 / 350 A |
| Rated load voltage | 34 V / 31.5 V |
| Rated output current range | 30 to 400 A |
| Rated output voltage range | 12 to 34 V |
| Maximum no-load voltage | 107 V |
| Rated duty cycle | 40 % / 100 % |
| Number of welding condition | 100 |
| Temperature rise | +320 °F (+160 ℃) |
| Operating temperature range | +14 to +104 °F (-10 to 40 ℃) |
| Operating humidity range | up to 50 % at 40 ℃, up to 90 % at 20 ℃ |
| Storage temperature range | -4 to 131 °F (-20 to 55 ℃) |
| Storage humidity range | up to 50 % at 40 ℃, up to 90 % at 20 ℃ |
| External dimensions (W×D×H) | 15.6" × 28.0" × 32.9" (395 mm × 710 mm × 835 mm) (w/o eyebolt) |
| Mass | 189.6 lbs (86 kg) |
| Static characterisitic | Constant voltage characteristic |

## 2.1.2 Applicable welding method

This section explains the applicable welding method (shield gas /wire type /welding type) and wire diameter.

Standard specification

| WELDING METHOD | GAS (*1) | WIRE MATERIALS | WIRE DIA. [in. (mm)] | TRAVEL SPEED |
|---|---|---|---|---|
| AC PULSE | MIG(100%Ar) | SOFT ALUMINIUM | 3/64 / 1/16 (1.2 / 1.6) | (*2) |
| | | HARD ALUMINIUM | .040 / 3/64 / 1/16 (1.0 / 1.2 / 1.6) | (*2) |
| | | Brazing Cu Si | .035 / .045 (0.9 / 1.2) | (*2) |
| | | Brazing Cu Al | .035 / .045 (0.9 / 1.2) | (*2) |
| | | INCONEL | .045 (1.2) | (*2) |
| | MIG (2.5 % $CO_2$) (*1-1) | STAINLESS FERRITE | .035 / .040 / .045 (0.9 / 1.0 / 1.2) | (*2) |
| | MIG (2 % $O_2$) (*1-2) | STAINLESS STEEL | .035 / .040 / .045 (0.9 / 1.0 / 1.2) | (*2) |
| | MAG (20 % $CO_2$) (*1-3) | MILD STEEL | .035 / .040 / .045 (0.9 / 1.0 / 1.2) | (*2) |
| DC PULSE | MIG (100 % Ar) | SOFT ALUMINIUM | 3/64 / 1/16 (1.2 / 1.6) | (*2) |
| | | HARD ALUMINIUM | .040 / 3/64 / 1/16 (1.0 / 1.2 / 1.6) | (*2) |
| | | Brazing Cu Si | .035 / .045 (0.9 / 1.2) | (*2) |
| | | Brazing Cu Al | .035 / .045 (0.9 / 1.2) | (*2) |
| | | INCONEL | .045 (1.2) | (*2) |
| | MIG (2.5 % $CO_2$) (*1-1) | STAINLESS FERRITE | .035 / .040 / .045 (0.9 / 1.0 / 1.2) | (*2) |
| | MIG (2 % $O_2$) (*1-2) | STAINLESS STEEL | .035 / .040 / .045 (0.9 / 1.0 / 1.2) | (*2) |
| | MAG (20 % $CO_2$) (*1-3) | MILD STEEL | .035 / .040 / .045 (0.9 / 1.0 / 1.2) | (*2) |
| AC WAVE PULSE | MIG (100 % Ar) | SOFT ALUMINIUM | 3/64 / 1/16 (1.2 / 1.6) | (*2) |
| | | HARD ALUMINIUM | .040 / . 3/64 / 1/16 (1.0 / 1.2 / 1.6) | (*2) |
| | MIG (2.5 % $CO_2$) (*1-1) | STAINLESS FERRITE | .035 / .040 / .045 (0.9 / 1.0 / 1.2) | (*2) |
| | MIG (2 % $O_2$) (*1-2) | STAINLESS STEEL | .035 / .040 / .045 (0.9 / 1.0 / 1.2) | (*2) |
| | MAG (20 % $CO_2$) (*1-3) | MILD STEEL | .035 / .040 / .045 (0.9 / 1.0 / 1.2) | (*2) |
| DC WAVE PULSE | MIG (100 % Ar) | SOFT ALUMINIUM | 3/64 / 1/16 (1.2 / 1.6) | (*2) |
| | | HARD ALUMINIUM | .040 / 3/64 / 1/16 (1.0 / 1.2 / 1.6) | (*2) |
| | MIG (2.5 % $CO_2$) (*1-1) | STAINLESS FERRITE | .035 / .040 / .045 (0.9 / 1.0 / 1.2) | (*2) |
| | MIG (2 % $O_2$) (*1-2) | STAINLESS STEEL | .035 / .040 / .045 (0.9 / 1.0 / 1.2) | (*2) |
| | MAG (20 % $CO_2$) (*1-3) | MILD STEEL | .035 / .040 / .045 (0.9 / 1.0 / 1.2) | (*2) |

*1: Note that the "collective" voltage adjustment may not meet the appropriate condition if a mixing gas other than those with the following mixing ratios is used.

*1-1: MIG gas (mild steel): Argon (Ar) 97.5 % + Oxygen ($O_2$)2.5 %

*1-2: MIG gas (stainless steel): Argon (Ar) 98 % + Oxygen ($O_2$)2 %

*1-3: MAG gas: Argon (Ar) 80 % + Carbon dioxide ($CO_2$)20 %

*2: Available for applications either of "STANDARD" or "HIGH".

## 2.1.3 External dimensions

This section explains the external dimensions of the welding power source.

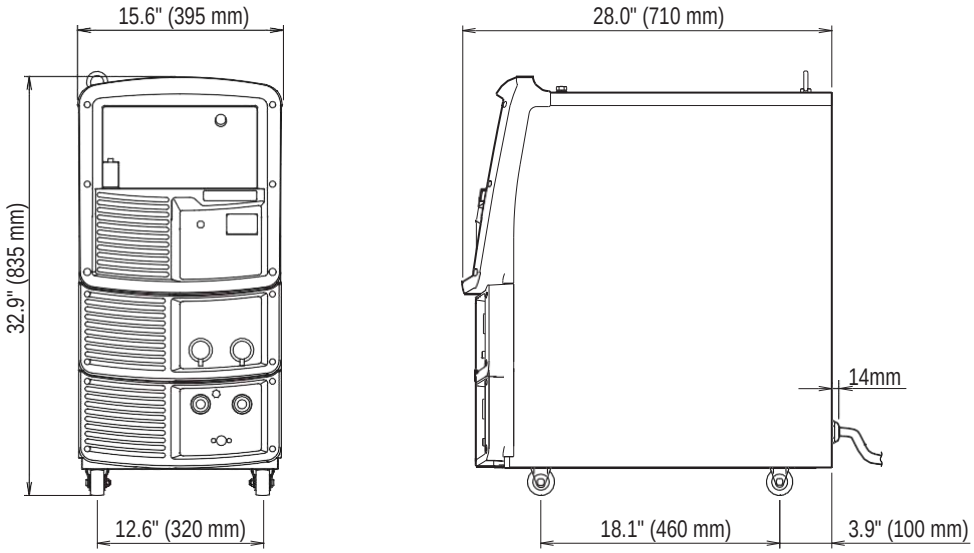

## 2.1.4 Rated duty cycle

This section explains the rated duty cycle of the welding power source.

**⚠ CAUTION**

- **Use this welding power source at or under the rated duty cycle.**
  **Exceeding the rated duty cycle may result in deterioration and damage to the welding power source.**
- **Periodically blow moisture-free compressed air to clean dust and dirt accumulated on the transistor and radiation fin of the diode.**
  **If dust and dirt accumulate on the radiation fin, it may not only reduce the duty cycle but also result in degradation or burnout of the welding power source.**

- The rated duty cycle of the welding power source is the following：
  400 A 40 %
  350 A 100 % (for DC)
  (Rated duty cycle of 60 % means the power source must be rested for 4 minutes after 6 minutes of continuous welding at the rated current.)

<Operation cycle at duty cycle of 60 %>

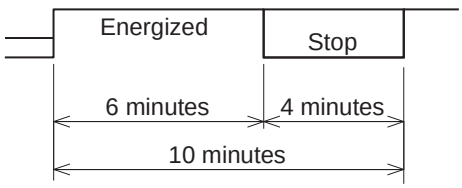


- Use the welding power source within its usable range by observing the duty cycle for the welding current.
- Use the welding power source within the lowest rated duty cycle of combined accessories such as welding torches.

<Relationship between welding current and duty cycle>

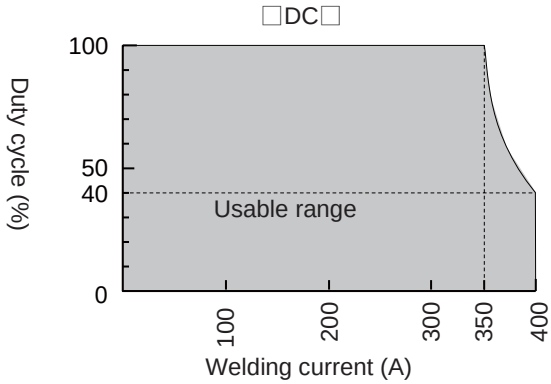


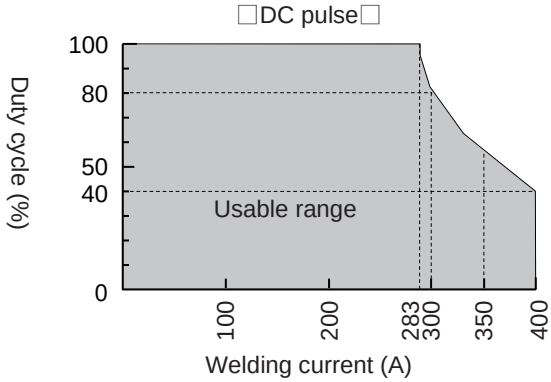

# 2.2 Product Configuration

This section explains the standard or optional composition of the welding power source and parts to be prepared by customers.

## 2.2.1 Standard composition

This section explains the standard composition of the welding power source.
For equipment used in combination with the welding power source connected to robot, refer to the instruction manual of the robot controller.

**⚠ CAUTION**

- **Use this welding power source in combination with the specified wire feeder. Connecting to any equipment other than specified may cause failure of the welding power source.**

- When air-cooled welding torch is used

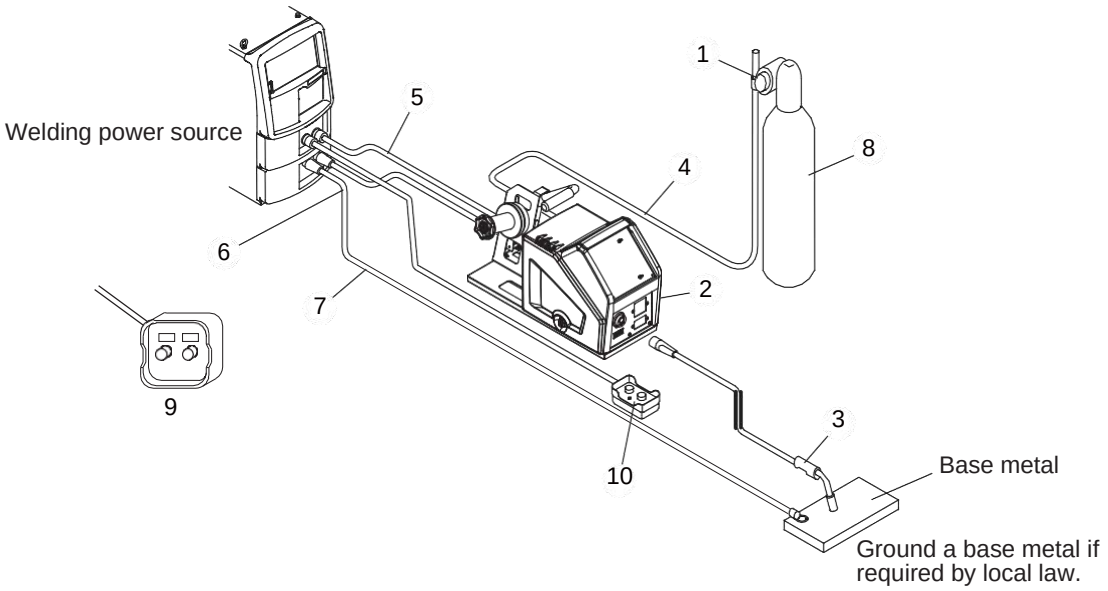


| No. | Name | Required component | Optional accessories | Remarks |
|---|---|---|---|---|
| 1 | Gas regulator | | | To be prepared by the customer. (☞ 2.2.2 Accessory (not supplied)) |
| 2 | Wire feeder | ○ | | |
| 3 | Welding torch | ○ | | |
| 4 | Gas hose [118.1" (3 m)] | ○ | | (*1) Included in feeder |
| 5 | Control cable for wire feeder [59.0" (1.5 m)] | ○ | | (*1) Included in feeder |
| 6 | Power cable for torch side | ○ | | (*1) |
| 7 | Power cable for base metal side | ○ | | (*1) |
| 8 | Shielding gas | | | To be prepared by the customer. (☞ 2.2.2 Accessory (not supplied)) |
| 9 | Digital remote control (optional) | | ○ | (☞ 2.2.3 Optional accessories) |
| 10 | Analog remote control [118.1" (3 m)] (optional) | | ○ | (*1) |

*1: Optional extension cable and hose [196.9" /393.7" /590.6" /787.4" (5 m/10 m/15 m/20 m)] are also available. (☞ 2.2.3 Optional accessories)

- At TIG welding:

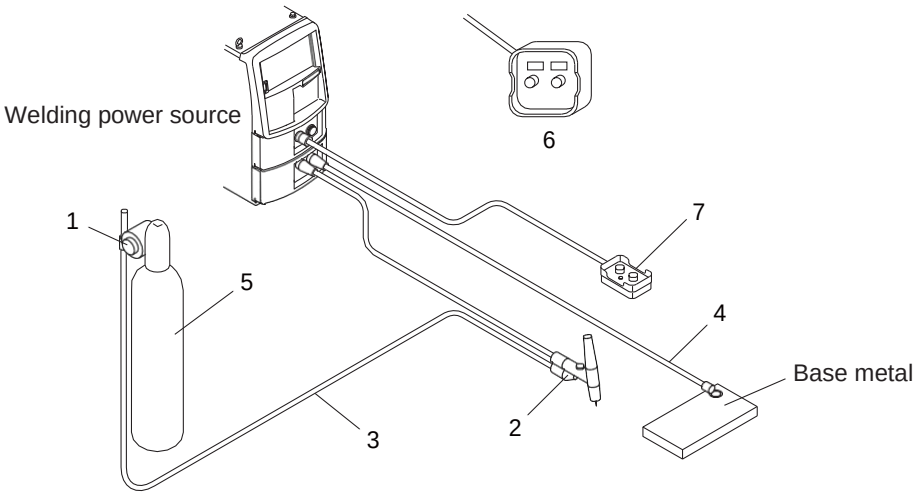


| No. | Name | Required component | Optional accessories | Remarks |
|---|---|---|---|---|
| 1 | Gas regulator | | | To be prepared by the customer. (☞ 2.2.2 Accessory (not supplied)) |
| 2 | Welding torch | | | |
| 3 | Gas hose [118.1" (3 m)] | ○ | | (*1) Included in feeder |
| 4 | Power cable for base metal side | ○ | | (*1) |
| 5 | Shielding gas | | | To be prepared by the customer. (☞ 2.2.2 Accessory (not supplied)) |
| 6 | Digital remote control (optional) | | ○ | (*1) |
| 7 | Analog remote control [118.1" (3 m)] (optional) | | ○ | (*1) |

*1: Optional extension cable and hose [196.9" /393.7" /590.6" /787.4" (5 m/10 m/15 m/20 m)] are also available. (☞ 2.2.3 Optional accessories)

- At DC STICK welding:

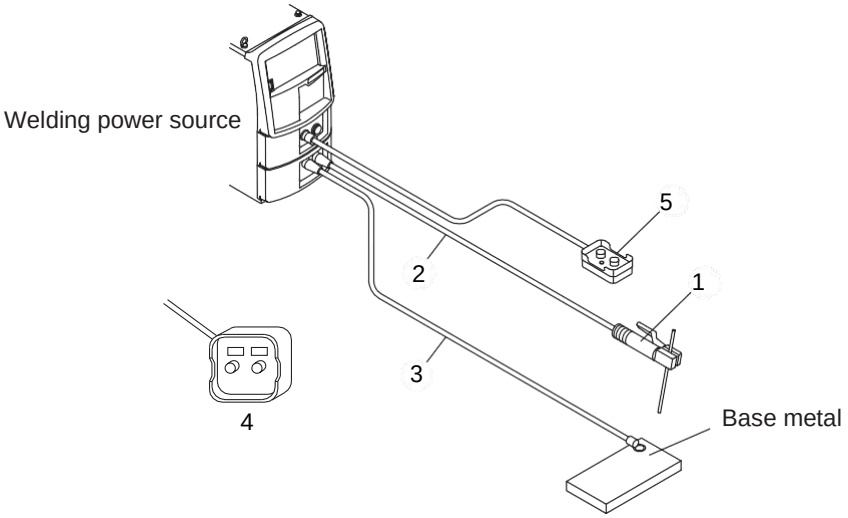


| No. | Name | Required component | Optional accessories | Remarks |
|---|---|---|---|---|
| 1 | Welding electrode holder | | | To be prepared by the customer. (☞ 2.2.2 Accessory (not supplied)) |
| 2 | Power cable [AWG2 (38mm²) or more] | ○ | | (*1) |
| 3 | Power cable for base metal side | ○ | | (*1) |
| 4 | Digital remote control (optional) | | ○ | (*1) |
| 5 | Analog remote control [118.1" (3 m)] (optional) | | ○ | (*1) |

*1: Optional extension cable and hose [196.9" /393.7" /590.6" /787.4" (5 m/10 m/15 m/20 m)] are also available. (☞ 2.2.3 Optional accessories)

### 2.2.1.1 Wire feeder and welding torch

Wire feeder and welding torch are provided as standard component of the welding power source. Refer to the instruction manuals for details.

## 2.2.2 Accessory (not supplied)

This section explains the accessories to be prepared by the customer before operating the welding power source.
Prepare the following:

- Shielding gas

  Use a shielding gas suitable to the welding method.

| Name | Remarks |
|---|---|
| MAG gas | Argon (Ar) 80 % + Carbon dioxide ($CO_2$) 20 % |
| MIG gas | Argon (Ar) 97.5 % + Oxygen ($O_2$) 2.5 % |
| MIG gas (stainless) | Argon(Ar) 98 % + Oxygen ($O_2$) 2 % |
| MIG gas (aluminum)/ aluminum-bronze/ /Silicon-bronze) | Argon (Ar) 100 % |

- Gas regulator

  For the gas regulator, make sure to use a device for compressed gas cylinder that conforms to the specific application of the shielding gas.

- Cooling water circulation device

  In using the water-cooled welding torch, prepare a cooling water circulation device.

- Welding torch (for TIG welding)

  For TIG welding, prepare a torch for TIG welding as well as a gas hose.

- Welding electrode holder (for DC STICK welding)

  For DC STICK welding, prepare a welding electrode holder and a welding electrode.

## 2.2.3 Optional accessories

This section explains the optional accessories used with the welding power source.

### 2.2.3.1 Remote control, voltage detection cable and other optional items

Following items are optionally available including remote control and voltage detection cable.

| Product name | Part No. (Model) | Remarks |
|---|---|---|
| Analog remote control | K5416Z00 | Includes 118.1" (3 m) cable |
| Digital remote control | E-2454 | CAN communication cable and BKCAN conversion connector are separately required. |
| CAN communication cable | BKCAN-0405 | 196.9" (5 m) |
| | BKCAN-0410 | 393.7" (10 m) |
| BKCAN conversion connector | K5810B00 | |
| Welding interface unit | IFR-101WB | For robots by other manufacturer |
| CAN communication module | K5422C00 | For using both the digital remote control and servo feeder for CAN. |
| PC welding monitor | K7231 | |
| Data storage | E-2560 | |
| Voltage detection cable | K5416N00 | Base metal side, 393.7" (10 m) |
| Voltage detection cable | K5416G00 | Base metal side, 1181.1" (30 m) |

### 2.2.3.2 Details on extension cables and hoses

Following extension cables and hoses are optionally available.
For extending the working radius, use extension cable and hose according to the working radius.

**⚠ CAUTION**

- **When using extension cables, roll them out.**
  **Winded extension cable may cause an unstable arc.**
- **Use extension cables with suitable length.**
  **Unnecessarily long extension cable may cause an unstable arc.**

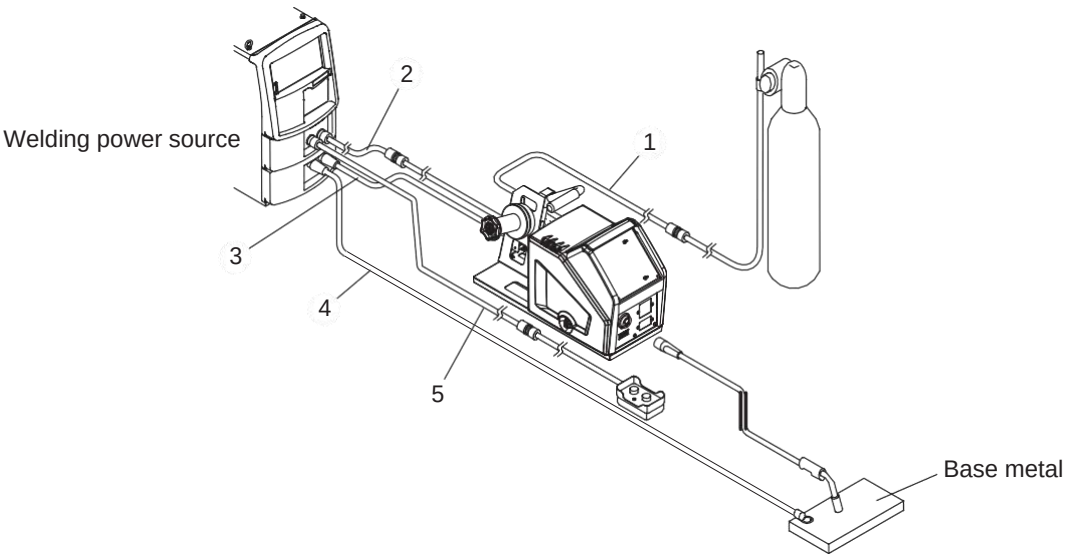


| No. | Product name | Model | | | |
|---|---|---|---|---|---|
| | | | | | |
| 1 | Gas hose | BKGG-0605 | BKGG-0610 | BKGG-0615 | BKGG-0620 |
| 2 | Control cable for wire feeder | BKCPJ-1005 | BKCPJ-1010 | BKCPJ-1015 | BKCPJ-1020 |
| 3 | Power cable (torch side) | BKPT-6007 | BKPT-6012 | BKPT-6017 | BKPT-6022 |
| 4 | Power cable (base metal side) | | | | |
| 5 | Control cable for remote control | BKCPJ-0605 | BKCPJ-0610 | BKCPJ-0615 | BKCPJ-0620 |

# 2.3 Part Names

This section explains the part names of the welding power source.

## 2.3.1 Front panel

The section explains the front section of the welding power source.

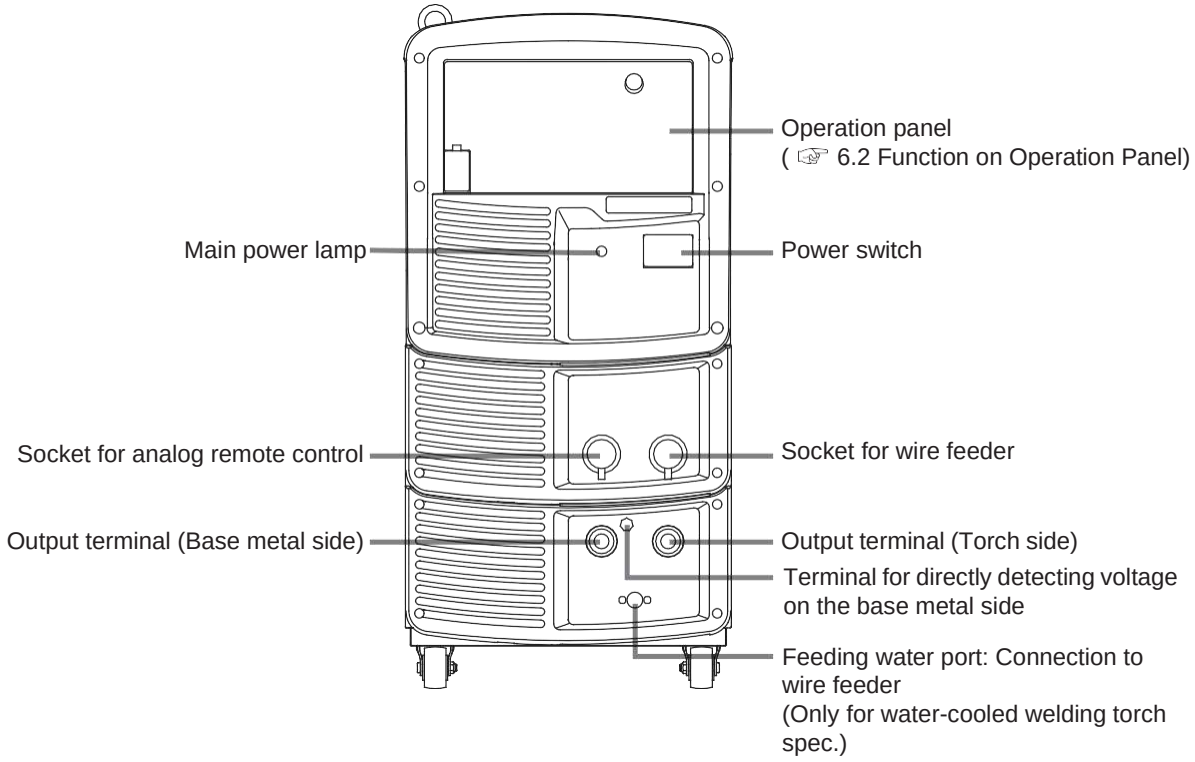

## 2.3.2 Rear panel

The section explains the rear section of the welding power source.

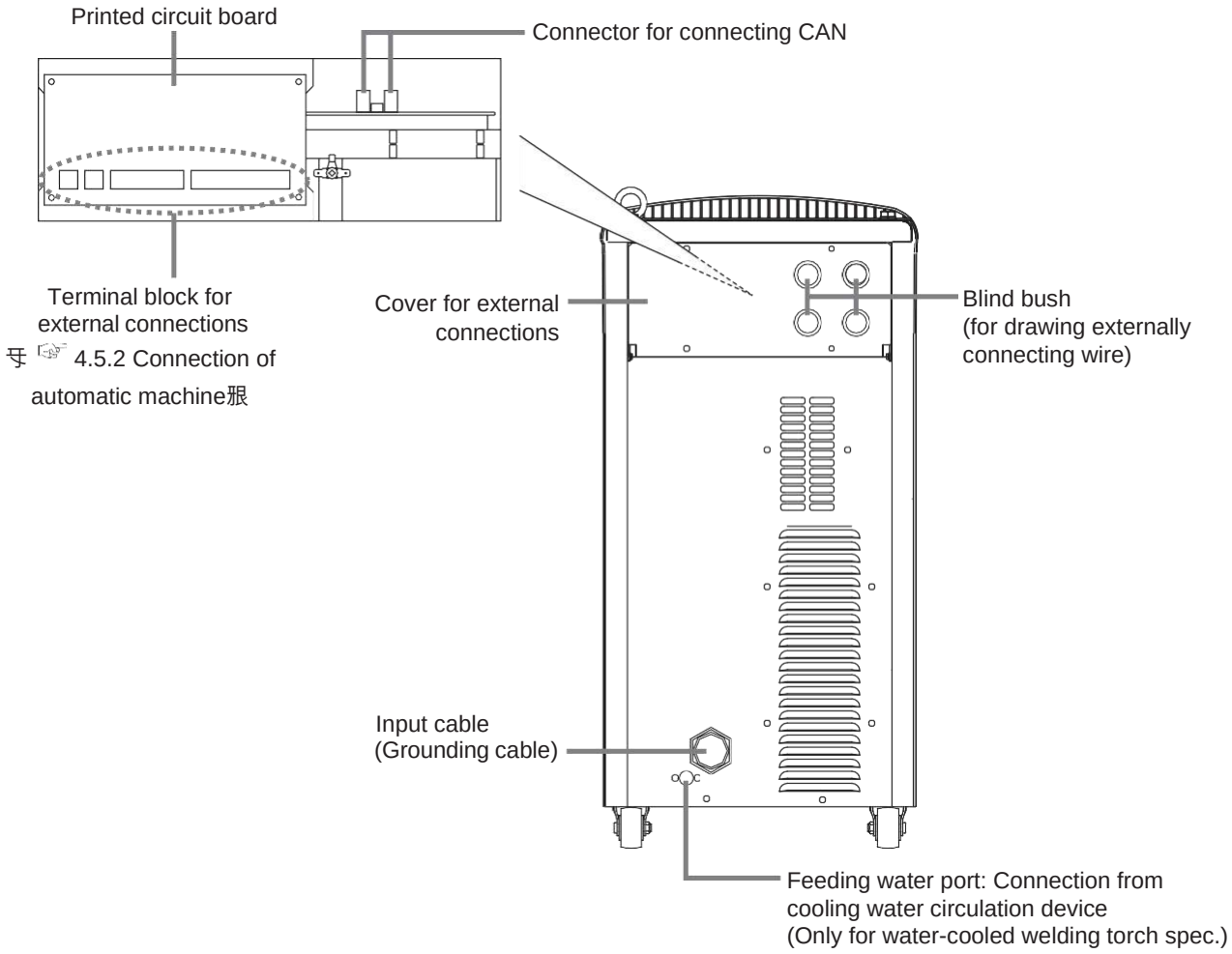

# Chapter 3 Transportation and Installation

This chapter explains the necessary equipment, installation environment and transportation method for installing the welding power source.

## 3.1 Required Equipment

This section explains the necessary power supply equipment for installing the welding power source and equipment for preventing lack of oxygen and dust hazard during welding.

### 3.1.1 Welding power source equipment

For installing the welding power source, power source equipment and protective device that meet the following ratings are required.

**⚠ WARNING**

- **When the welding power source is used in a humid environment such as construction site, or location with highly conducting material such as steel plate or on steel structure, install a leakage breaker.**
  **Otherwise, electric shock due to leakage of electricity may occur.**
- **Be sure to install a switch with fuse or a circuit breaker (for motor) to the input side of each welding power source.**
  **Otherwise, electric shock and fire due to overcurrent or damage to the welding power source may occur.**

| Equipment | | Rating |
|---|---|---|
| Welding power source equipment | Supply voltage | 460 V ± 10 % (three phases) |
| | Installed capacity | 29 kVA or more |
| Protective device | Switch with fuse | Switch capacity: 30 A or more<br>Fuse: 30 A |
| | No-fuse breaker<br>(or leakage breaker) (*1) | 50 A |

*1: High sensitivity type leakage breaker is recommended for installing a leakage breaker. (Consult the breaker manufacturer for details)

#### 3.1.1.1 Use of the engine generator and auxiliary power

**⚠ CAUTION**

- **To prevent the welding power source from being damaged or arc loss, follow the instructions below.**

When using an engine generator for the welding power source, pay attention to the following.

- Set the output voltage of the engine generator to the voltage range between 460 and 483 V at no-load welding operation.
  Setting to an extremely high output voltage may result in damage to the welding power source.

- Use an engine generator with a damper winding that has a capacity of more than twice the rated input (kVA) of the welding power source.
  Generally, the recovery time of the engine generator's voltage for load change is slower than that of the commercial power source. If the engine generator does not have sufficient capacity, sudden current change such as arc start will occur and this may result in an abnormal decrease in output current or arc loss.
- Be sure to use a single welding power source with a single engine generator. If more than two welding power sources are combined, output voltage will become unstable with a likely result of arc loss.

Use the auxiliary power of engine welder with an improved voltage waveform.
Some engine welders have poor electricity that may cause product damage on the welding power source.

## 3.1.2 Ventilation equipment/partial exhaust facility

This section explains the ventilation equipment and partial exhaust facility in welding work area.

### 3.1.2.1 Ventilation equipment

When welding is required in tank, boiler, reaction tower, or hold of a ship, closed space, or any other places of poor ventilation, ensure to provide ventilation equipment.
Condition of ventilation equipment:
Oxygen concentration of 18 % or more must be maintained in the welding work area.

**⚠ WARNING**

- **Gas of larger gravity than that of oxygen, such as carbon dioxide gas or argon gas, retains at the bottom part.**
  **To prevent anoxia due to the retention gas, provide ventilation equipment.**
- **When it is difficult to provide ventilation equipment or the ventilation equipment does not give sufficient performance, ensure to use respiratory protective equipment.**
- **Periodically inspect the ventilation equipment to ensure correct and proper performance of ventilation.**

### 3.1.2.2 Partial exhaust facility

To prevent any health damage due to poisonous gas or particle substances (fume) emitted in the welding operation, provide partial exhaust facility.

**⚠ WARNING**

- **When it is difficult to provide a partial exhaust facility or the ventilation or exhaust facility does not give sufficient performance, ensure to use the respiratory protective equipment.**

# 3.2 Installation Environment

This section explains the installation environment of the welding power source.

**⚠ WARNING**

- **For prevention from fire or damage to the welding power source, be sure to install in a location that satisfies the following environment:**

## 3.2.1 Installation environment

- Location with no combustible materials or flammable gas
  If combustible materials cannot be removed, cover them with noncombustible covers.
- Location with no scattering of organic solvent, chemicals, cutting oil, and composition oil or atmosphere containing the above
  Such materials cause crack (breaking) and deterioration in the plastic part.
- Location with no exposure to direct sunlight or rain
- Robust and flat floor surface such as concrete pavement
  Assure sufficient floor face strength to ensure that the weight of welding power source can withstand.
  Face the surface with the eye bolt on upside to prevent from falling.
- Location with an ambient temperature of+14 to +104 °F (-10 to 40 °C)
- No condensation at location with an ambient humidity of 50 % or lower (ambient temperature of 104 °F (40 °C)), and 90 % or lower (ambient temperature of 68 °F (20 °C))
- Location with an altitude of less than 3280 ft (1000 m)
- Location with an incline of 10° or less
  (For the welding power source with wheels, use chock to prevent from sliding.)
- Location with no metallic foreign body such as spatter entering the welding power source
- Installation distance of 11.8" (30 cm) or more between the welding power source and the wall or other welding power source
  Ensure not to block the ventilation hole.
- Location with no wind on the arc section
  Install a wind shield to protect arc from wind.

## 3.2.2 Electromagnetic interference

To prevent electromagnetic troubles, read the following. Also, if electromagnetic troubles occur, check the following again.

- Change the installation place of the welding power source.
- Mount an input cable in the grounded metallic conduit.
- Shield the whole welding places from electromagnetic trouble. If electromagnetic troubles are still not solved after following the above instructions, consult your nearest dealer.

# 3.3 Transportation Procedure

This section explains the procedure for transportation of the welding power source.

**⚠ WARNING**

- Do not touch the input and output terminals and the internal live electrical parts of the welding power source.
  It may cause electric shock.
- Shut off the input power with the disconnect switch all turned off even the distance of transportation is short.
  If work is performed while the input power is on, electric shock may occur.

**⚠ CAUTION**

- During transportation, be careful not to get the hand, leg or other body part caught between the welding power source and floor.
- Do not apply strong shock to the welding power source when placing it on the floor.
  It may cause damage to the welding power source.

Since large current abruptly flows inside the welding power source during welding, other machine near the welding power source may be failed due to electromagnetic noise.
Follow the instructions below:

- Do not ground the welding power source commonly with other machines.
- Close and fix all doors and covers of the welding power source.
- Do not use an unnecessarily long cables.
- Place a base metal cable and a torch side cable as closely as possible.

In the event of electromagnetic problems, follow the instructions below:

- Change the installation place of the welding power source.
- Keep the machines which may be affected away as far from the welding power source, cables, and welding site as possible.
- Add a noise filter to the input cables.

### 3.3.1 Transportation with lifting lug

This section explains the procedure for transportation with lifting lug such as a crane.

**⚠ WARNING**

**For preventing falling of the welding power source and resulting accidents, be sure to observe the following:**

- **For operation of a crane or hoisting, make sure that a qualified personnel operate them with attention to the surrounding area for safety.**
- **Use the lifting tool such as wire and shackle suitable for the weight of the welding power source. Hoist according to the specified procedure.**
- **Lift the welding power source alone with two wires using all of the eye bolts.**
- **Do not hoist with tools and other devices placed on the welding power source.**
- **Make sure beforehand that the eye bolts on the surface of welding power source are not loose. Tighten the eye bolts when they are loose.**

**STEP**

1. **Attach the lifting lug with the eye bolts.**

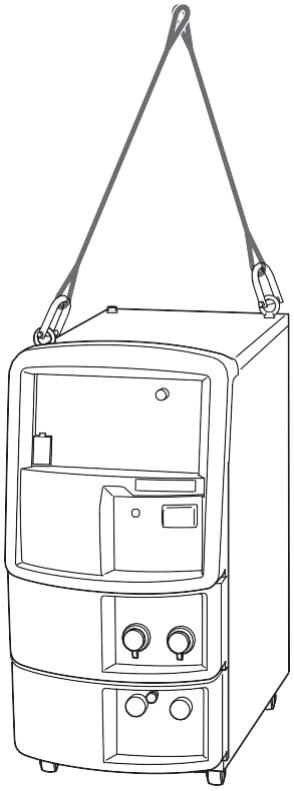

2. **Lift the welding power source carefully paying attention to the balance by using lifting lug.**

## 3.3.2 Manual transportation with carts

This section explains the manual procedure for transportation using equipment such as a cart.

**⚠ WARNING**

- **When lifting the welding power source, make sure to hold the bottom of the welding power source by more than one person.**
  **If attempting to lift by holding the front plastic part, top cover, side plates, it may cause back pain, deformation or damage to the welding power source.**
- **When using a tool such as carriers, it must be suitable for the weight of the welding power source.**
  **Otherwise, falling of the welding power source may occur.**
- **If the installation position is slant, the welding power source with casters may move in an unexpected direction since universal casters are mounted on the rear side. Carefully push the welding power source, confirming the condition of the installation position.**

**STEP**

1. **For welding power source with wheels, use the wheel and push it carefully to prevent it from falling.**
   - You can freely change the direction of the welding power source with casters with the rear universal casters.

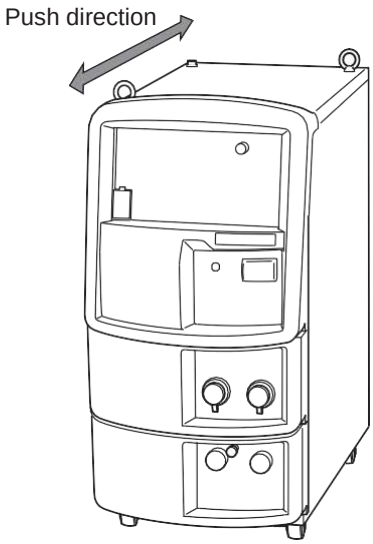


2. **When using a tool such as carriers, secure the welding power source and carrier with a rope before transporting.**

# Chapter 4 Connection

This chapter explains the procedure for connecting the welding power source.

## 4.1 Precautions for Connection Procedure and Grounding

This section explains the precaution for connection and grounding procedure. For protection from serious injury or fire, observe the following:

**⚠ WARNING**

**For protection from electric shock, observe the following points:**

- **Wear protective equipment such as protective gloves, safety shoes and long-sleeve clothes.**
- **Do not touch the input and output terminals and the internal live electrical parts of the welding power source.**
- **Have a qualified electrical engineer ground the case of the welding power source and base metal or jig electrically connected in accordance with local regulation.**
- **Make sure to cut the input power with the disconnect switch in the box connected with the welding power source. Do not turn on the input power before confirming the completion of connection.**
- **Use a cable with specified thickness. Do not use damaged cable or cable with stripped conductor.**
- **Ensure to tighten and insulate the connection of cables.**
- **Securely attach the case and cover of the welding power source after connecting the cables.**
- **When extending the cable, use only the specified extension cable. Do not extend the cable by connecting the round terminals.**

# 4.2 Connecting the Welding Power Source

This section explains the procedure for connecting the welding power source. Follow the steps below for connection of the welding power source.

**⚠ WARNING**

- **Do not turn on the input power of the welding power source until confirming the completion of connection work. Otherwise, electric shock may occur.**

| | |
|---|---|
| Connection of cable at output side | (☞ 4.2.1 Connection of cable at output side) |
| ↓ | |
| Connection of wire feeder | (☞ 4.2.2 Connection of wire feeder) |
| ↓ | |
| Connection of welding torch | (☞ 4.2.3 Connection of welding torch) |
| ↓ | |
| Connection of shielding gas | (☞ 4.2.8 Connection of shielding gas) |
| ↓ | |
| Connection of input power connectors | (☞ 4.3 Grounding and Connection of Input Power Supply) |
| ↓ | |
| Confirmation of connection | (☞ 4.4 Confirmation of Connection) |

## 4.2.1 Connection of cable at output side

This section explains the procedure for connecting of cable at output side.

**⚠ WARNING**

- **Use a grounding cable for the case, of welding power source and perform grounding. Otherwise, voltage may increase in the case or base metal which could cause electric shock.**

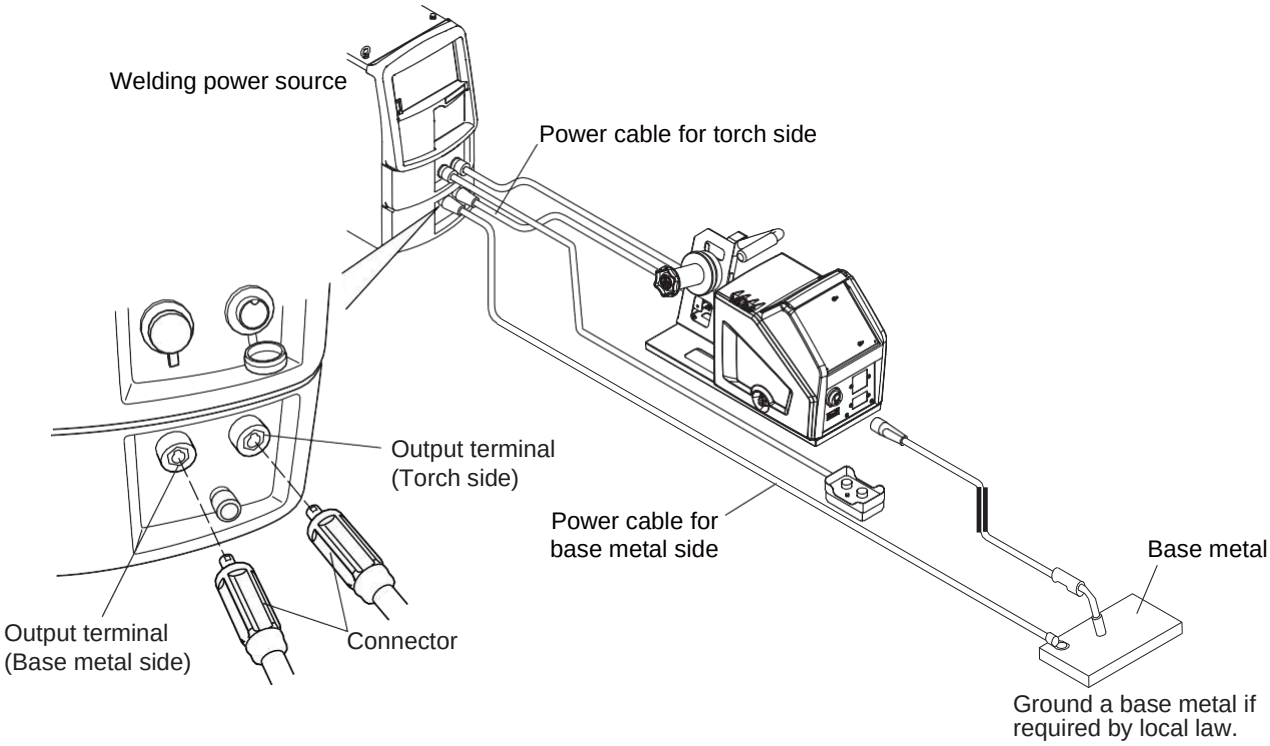


**STEP**

1. **Connect the power cable for base metal side to the output terminal (base metal side) and base metal.**
   - At the welding power source side, fit the convex part of the connector and concave part of the output terminal for secure connection and tighten them in the clockwise direction.
2. **Connect the power cable for torch side to the output terminal (torch side).**
   - Connect the connectors as same as above.

Connection for cable at output side is complete. Procedure is followed by 4.2.2 Connection of wire feeder.

## 4.2.2 Connection of wire feeder

This section explains the connecting procedure of the wire feeder. Refer also to the instruction manual of wire feeder.

**⚠ CAUTION**

- **When not using an analog remote control (optional accessory), do not remove the cap for the analog remote control.**

**TIPS**

- **When operating the welding power source by connecting to a robot, wiring for the wire feeder needs to be changed. (☞ 4.6 Wiring of Voltage Detection Cable at Base Metal Side)**

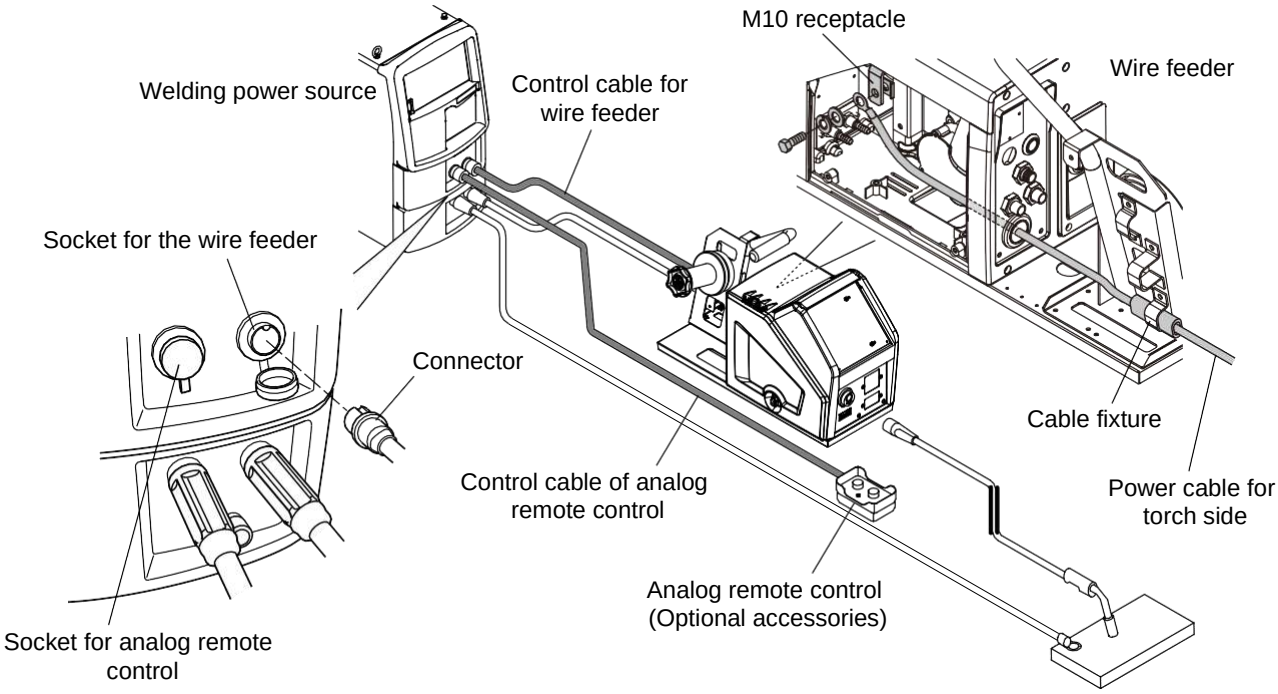


**STEP**

1. **Connect the power cable for wire feeder (torch side) to the M10 receptacle.**
   - Firmly attach the power cable for torch side by turning the connector in the clockwise direction.
2. **Remove the cap of the socket of wire feeder and insert the control cable (10 cores) to the socket for the wire feeder.**
   - Fit the concave part of the connector and convex part of the socket for secure connection and tighten the knurled screws in the clockwise direction.
   - When using an analog remote control (optional accessory), remove the cap of socket for analog remote control and insert the control cable (6 cores).

Connection for wire feeder is complete. Procedure is followed by 4.2.3 Connection of welding torch.

## 4.2.3 Connection of welding torch

This section explains the procedure for connecting the welding torch.

**TIPS**

- **When the air-cooled welding torch (with voltage detection) is used, refer to "4.2.4 Connection of voltage detection cable (Voltage detection cable is used)".**

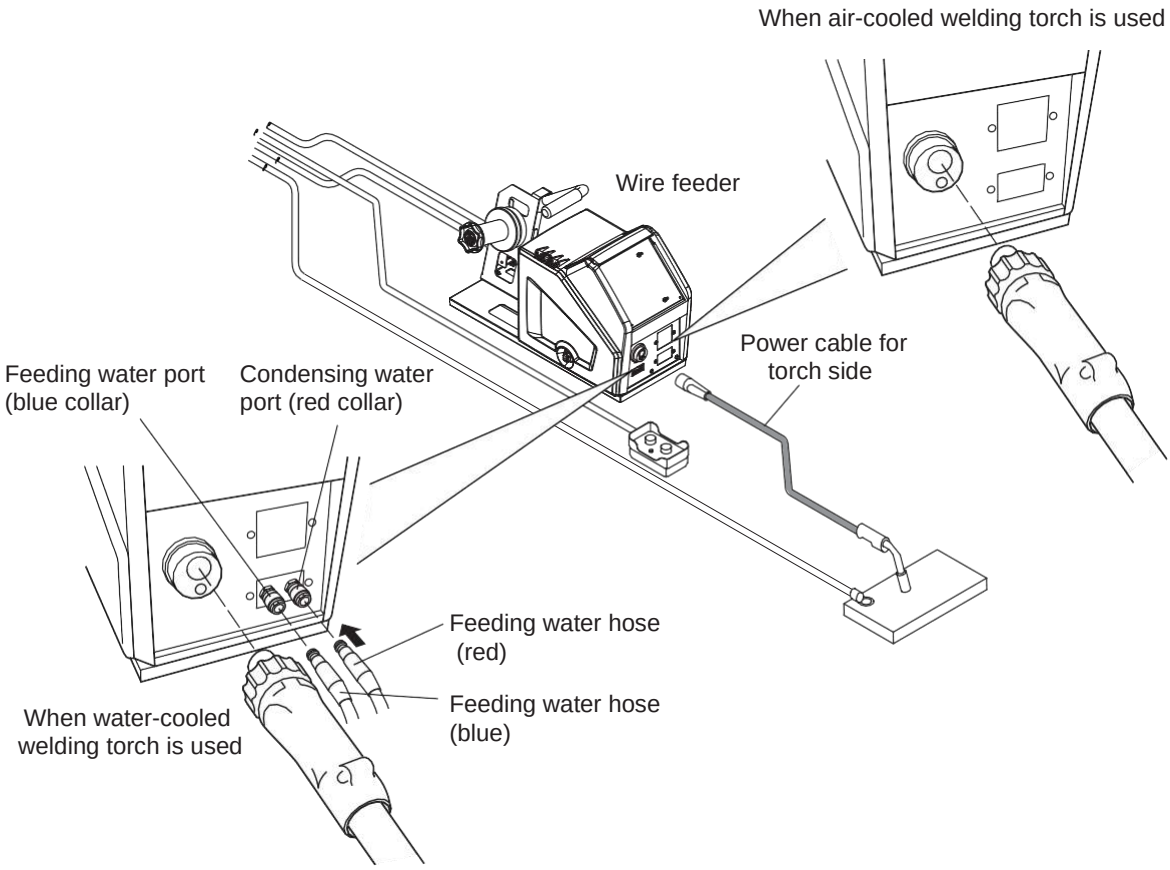


**STEP**

1. **Connect the torch cable to the wire feeder.**
   - Fit the form of the connector with that of the terminal, fully insert the connector.
2. **When using the water-cooled welding torch, connect the water feeding hose and condensing hose of the welding torch to the wire feeder.**
   - Fully insert the hose end to the connection port of wire feeder.
     For disconnection, hold the hose end, and press the collar part to the arrow mark direction shown in the figure.

Connection for welding torch is complete.

## 4.2.4 Connection of voltage detection cable (Voltage detection cable is used)

This section explains the procedure for connecting the voltage detection cable.

**TIPS**

- **When the voltage detection cable is used, see the instruction manual of the wire feeder.**
- **When the water-cooled welding torch is used, the voltage detection cable cannot be used.**
- **For connection of welding torch, refer also to "4.2.3 Connection of welding torch".**

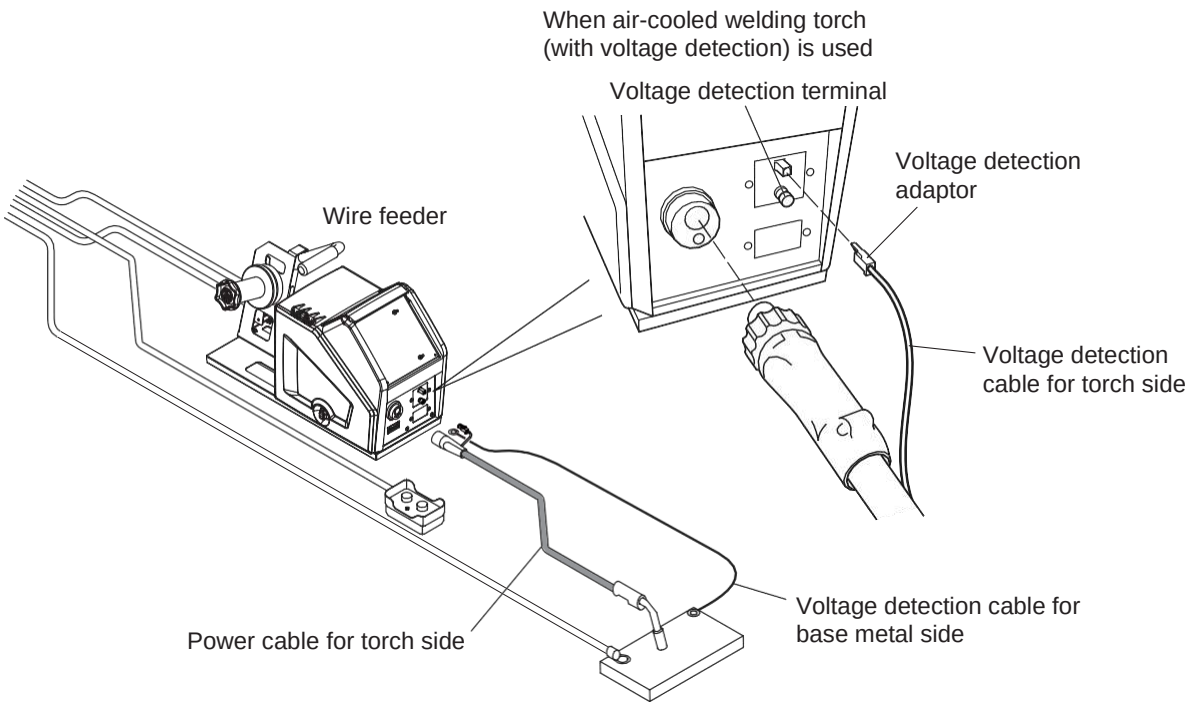


**STEP**

1. **Connect the torch cable and the voltage detection adapter to the wire feeder.**
2. **Cut the voltage detection cable for base metal side to a suitable length.**
3. **Connect the voltage detection cable for base metal side to the base metal.**
4. **Connect the voltage detection cable for base metal side to the voltage detection terminal of the wire feeder.**

**TIPS**

- **Voltage detection cable for base metal side can also be connected to the direct voltage detection terminal for base metal of the welding power source. When using the welding power source by lifting with hoisting equipment, connect the voltage detection cable for base metal side to the direct voltage detection terminal for base metal side.**

For reducing the influence of inductance noise, take note of the following caution on connection and wiring example of voltage detection cable.

Connection for voltage detection cable is complete. Procedure is followed by "4.2.8 Connection of shielding gas".

### 4.2.4.1 Caution on connection of voltage detection cable

Voltage detection cable needs to be wired so that arc voltage can be fed back with accuracy. Be sure to check the following for reducing the influence of inductance noise.

- Wire the voltage detection cable for the base metal away from the cable of base metal. For easier handling, cut the voltage detection cable for base metal side to a suitable length.

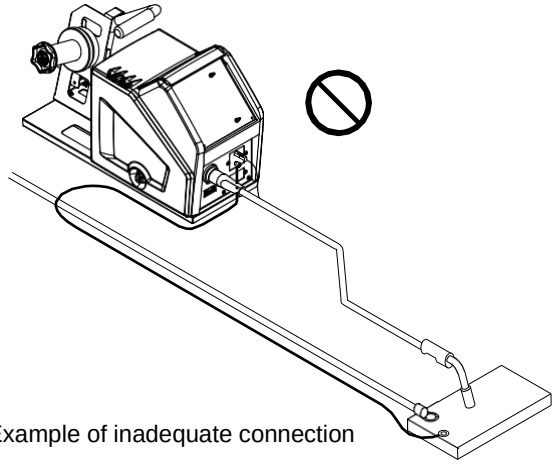

Example of inadequate connection

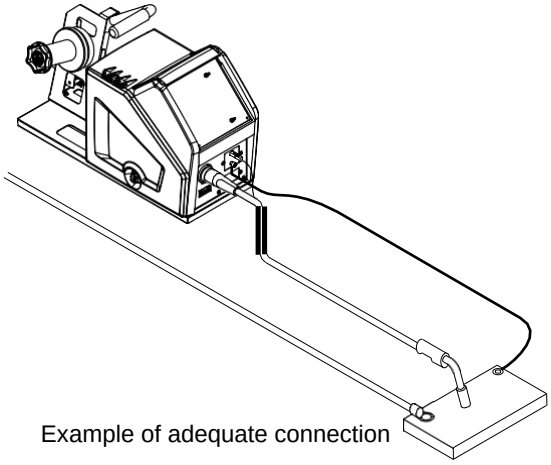

Example of adequate connection

- Wire the voltage detection cable of the base metal side close to the one at the torch side (detection wire) to narrow the area surrounded by the two voltage detection cables.

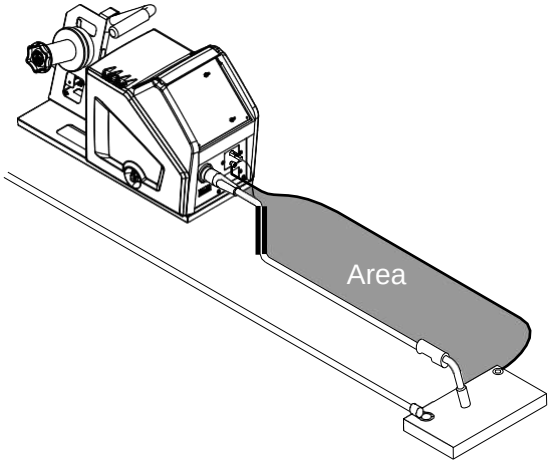


### 4.2.4.2 Caution on connection (AC pulse/AC wave pulse)

When using the welding power source in the AC pulse/AC wave pulse mode, make the cables as short as possible. When it is inevitable to use an extension cable, use caution on the following points.

- Bundle both the base metal cable and the torch cable and apply tape on them.

  Straighten the cables as much as possible.

  If you cannot straighten the cables as explained, run the torch cable on the base material.

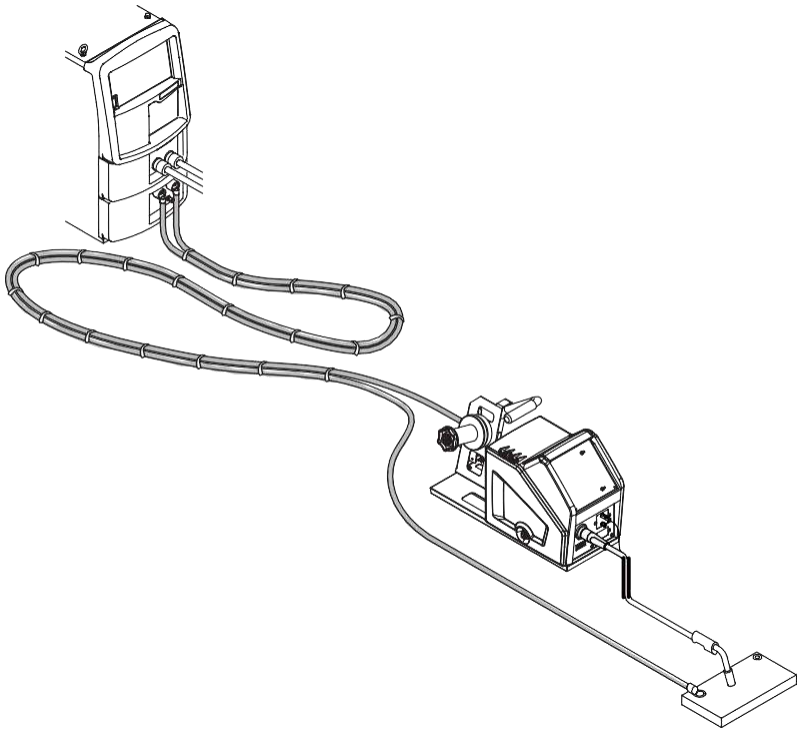

- When using the welding power source with surplus cables wound, wind them referring to the following good example.

[Bad example]

Do not wind all surplus cables in the same direction.

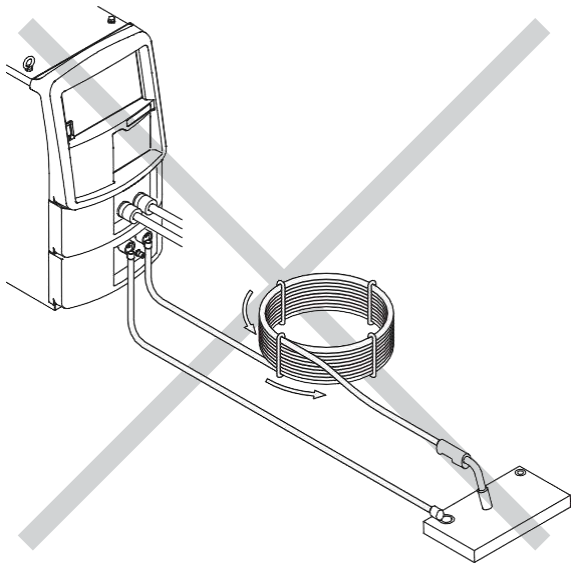

[Good example]

Wind each cable in the opposite direction to make two bundles, and pile them.

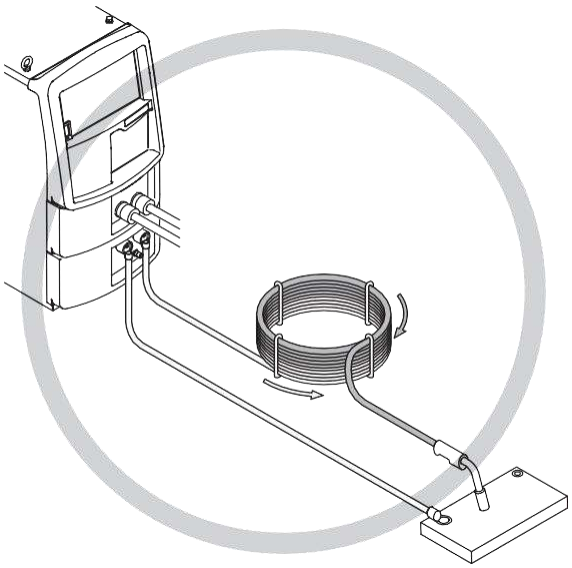

1. **Divide surplus cables to A and B and wind them in the same manner, times of winding, and diameter.**

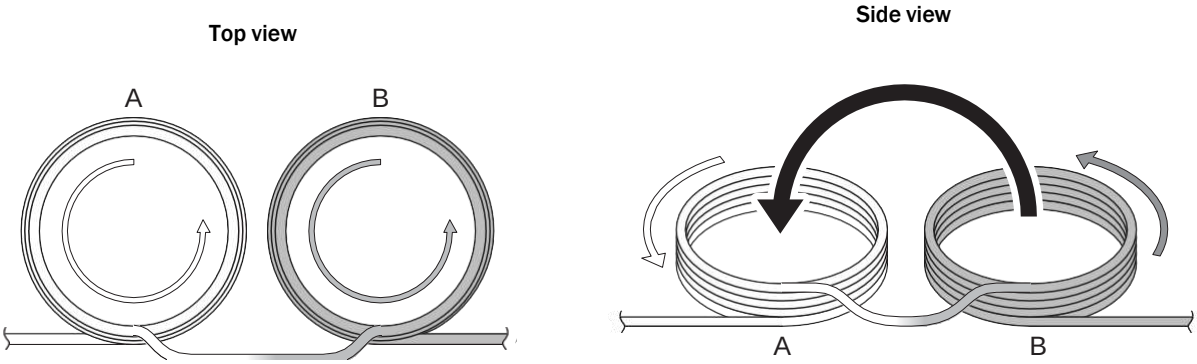


2. **Pile the bundle A on the bundle B.**

- Pile them so that their winding directions are opposite.

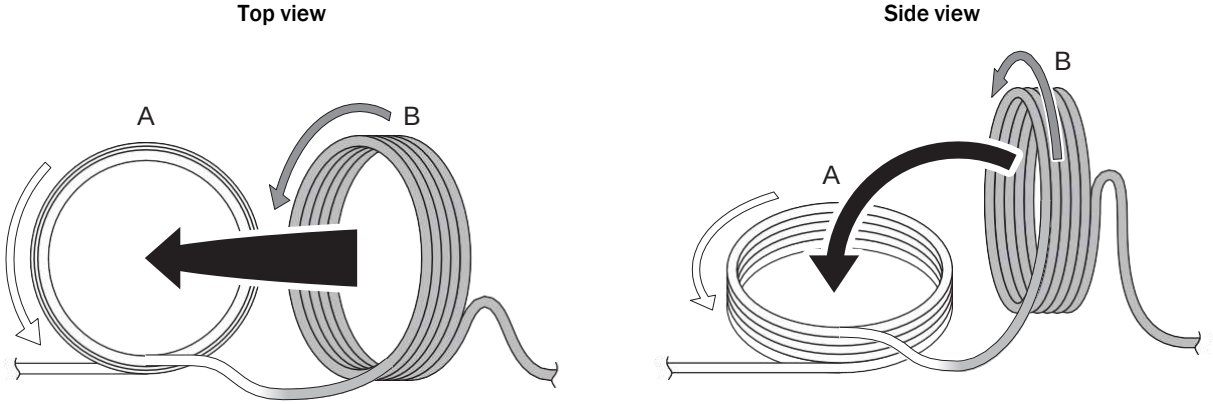


3. **Connect the bundles A and B with a wire or the like so that they do not get loose.**

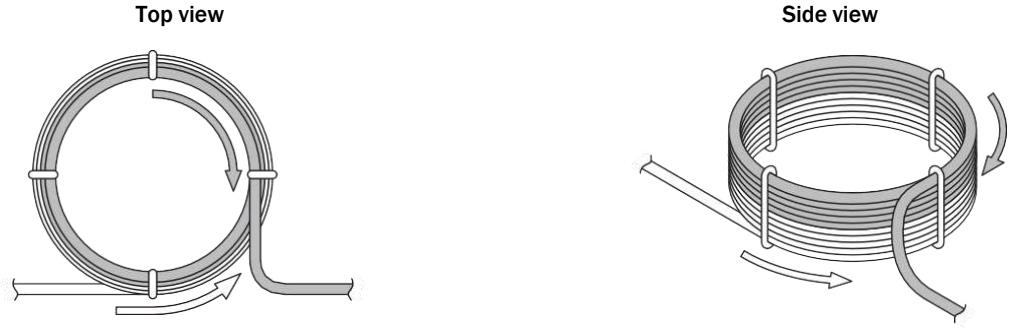

## 4.2.5 Connection at TIG welding

**⚠ CAUTION**

- **In using the welding power source for TIG welding, prepare a welding torch by the customer.**
- **Contrary to the normal connection, the TIG welding requires connection of the welding torch to the output terminal (base metal side). Also, connect the power cable for base metal side to the output terminal (torch side).**
- **After five seconds have passed, the safety voltage (approx.15 V) is automatically provided.**

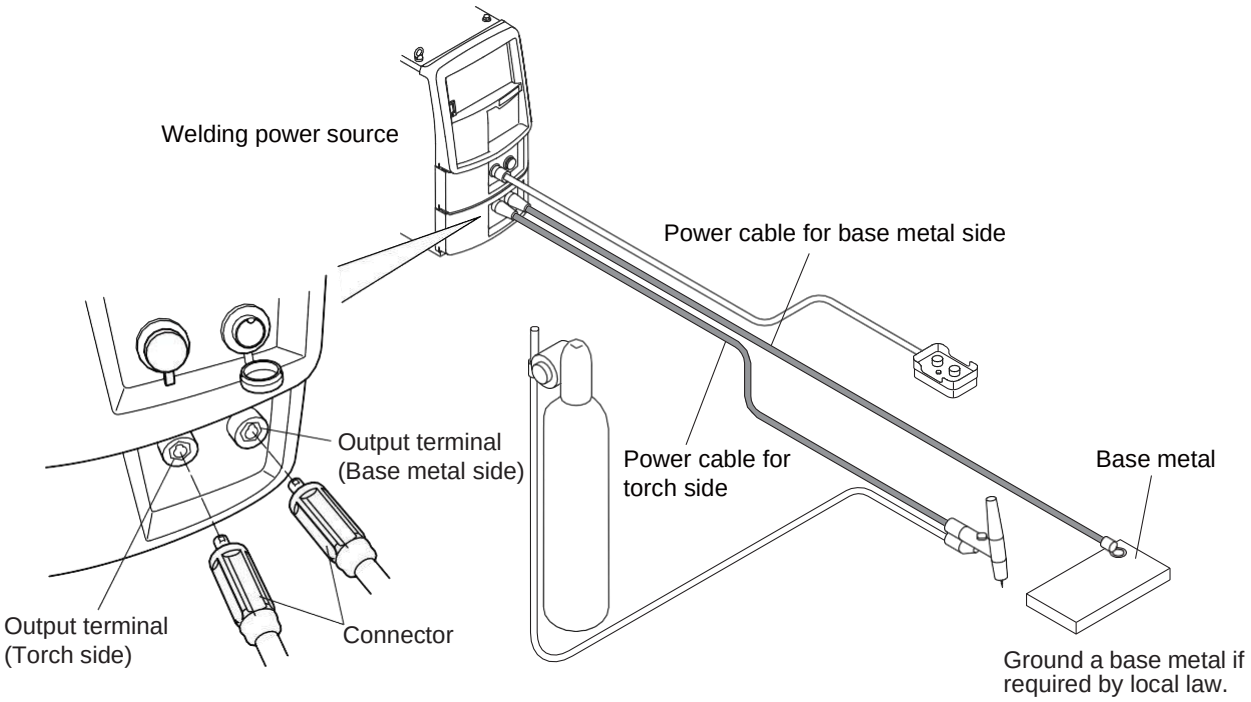


**STEP**

1. **Connect the power cable for torch side to the output terminal (base metal side).**
   - At the welding power source side, fit the convex part of the connector and concave part of the output terminal for secure connection and tighten them in the clockwise direction.
2. **Connect the power cable for base metal side to the output terminal (torch side) and base metal.**
   - Connect the connectors as same as above.

## 4.2.6 Connection at DC STICK welding

**⚠ CAUTION**

- **In using the welding power source for DC STICK welding, prepare a welding electrode holder by the customer.**
- **After five seconds have passed, the safety voltage (approx.15 V) is automatically provided.**

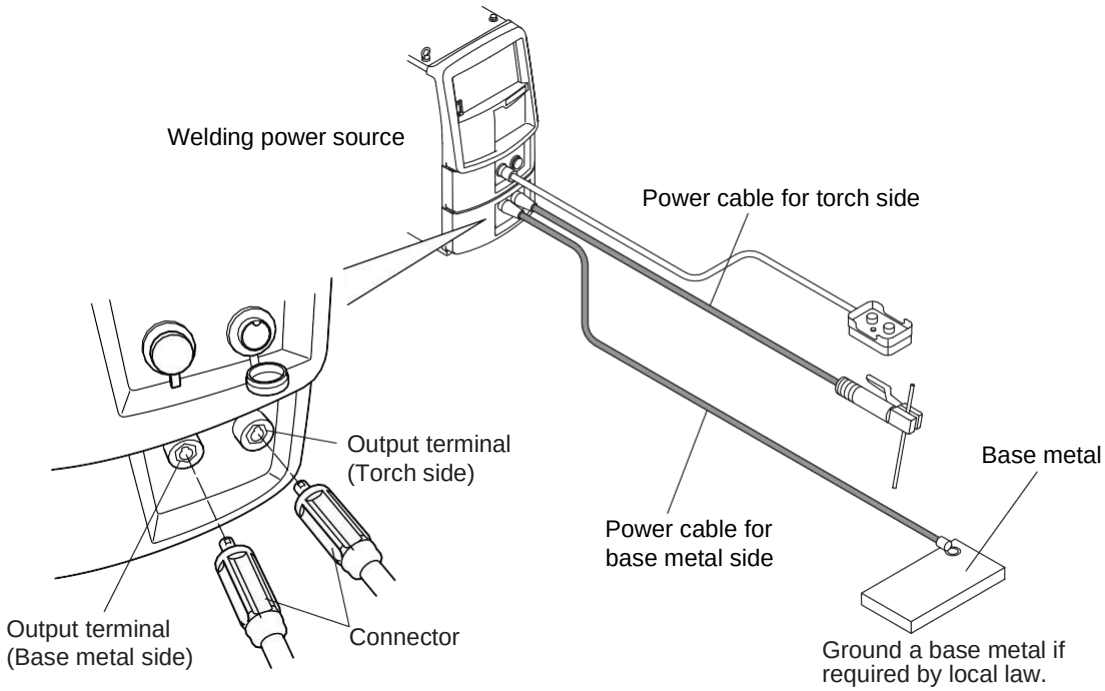


**STEP**

1. **Connect the power cable for base metal side to the output terminal (base metal side) and base metal.**
   - At the welding power source side, fit the convex part of the connector and concave part of the output terminal for secure connection and tighten them in the clockwise direction.
2. **Connect the cable for welding electrode holder side to the output terminal (torch side).**
   - Connect the connectors as same as above.

## 4.2.7 Connection of water hose with cooling water circulation device (when using the water-cooled welding torch)

This section explains the procedure to connect the water hole with the cooling water circulation device. Also, refer to the instruction manual of the cooling water circulation device.

**⚠ CAUTION**

- **Before connecting the water hose, conduct the groundwork.**

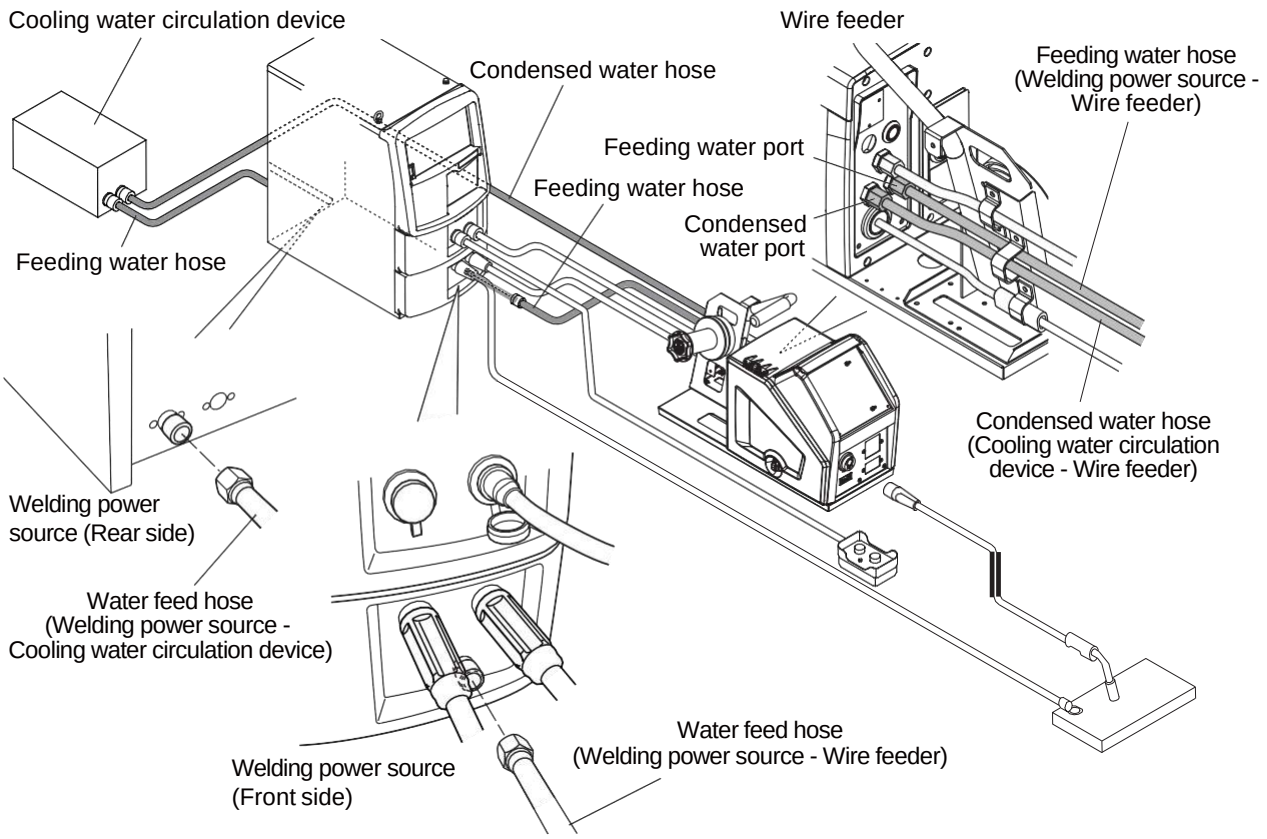


**STEP**

1. **Perform groundwork for the base metal, jigs, and welding power source.( 4.3 Grounding and Connection of Input Power Supply)**
2. **Connect the feeding water hose to the welding power source and the wire feeder.**
3. **Connect the feeding water hose to the welding power source and the cooling water circulation device.**
4. **Connect the condensed water hose with the cooling water circulation device and the wire feeder.**

Connections of the cooling water circulation device and the water hose are complete by the operations above. Then, perform the operations in "4.3 Grounding and Connection of Input Power Supply".

## 4.2.8 Connection of shielding gas

This section explains the procedure for connecting the shielding gas. Refer also to the instruction manual of wire feeder and gas regulator.

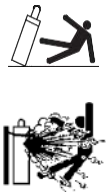

**⚠ WARNING**

- **Be sure to observe the following points to prevent from suffocation due to gas leakage or explosion.**
  - **Be sure to turn off the shielding gas at the main tap when the welding power source is not in use.**
  - **Securely connect the gas hose and attach the gas regulator with a wrench so that there is no gas leakage.**
- **For the gas regulator, make sure to use a device for compressed gas cylinder that conforms to the specific application of the shielding gas.**
  **Using an inappropriate gas regulator may cause explosion.**
- **Keep the cylinder upright and securely chained to a stationary support or a rack.**
  **Falling or tipping of cylinder may cause serious injury.**
- **After five seconds have passed, the voltage is automatically provided.**

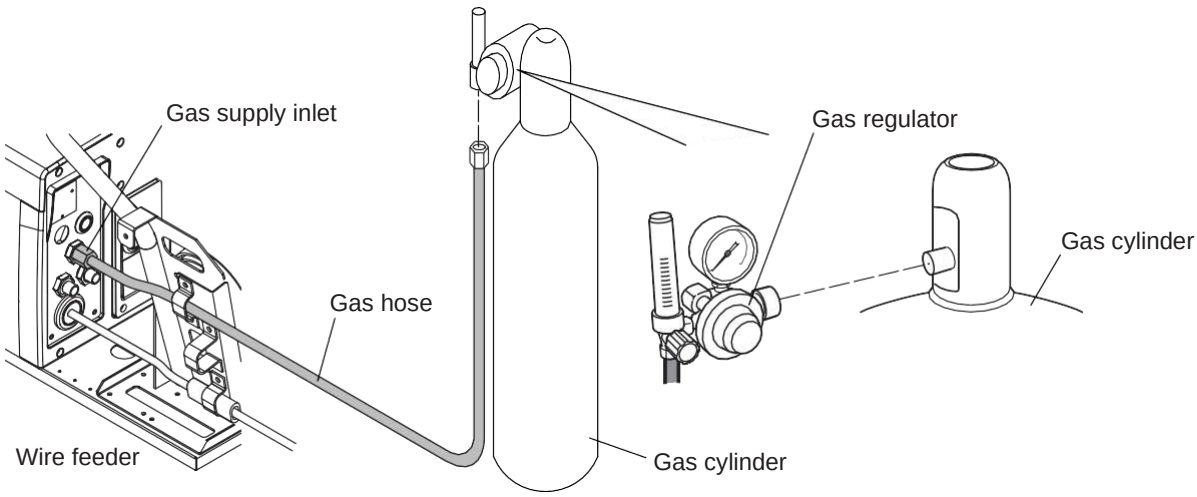


**STEP**

1. **Attach the gas regulator to the gas cylinder.**
2. **Connect the gas hose to the gas regulator and the wire feeder.**
   - For TIG welding, connect the gas hose to the welding torch for TIG welding.

Connection for shielding gas is complete.
In using the air-cooled welding torch, continue to perform the step described in "4.3 Grounding and Connection of Input Power Supply".

# 4.3 Grounding and Connection of Input Power Supply

This section explains the procedure for performing grounding work, connecting the welding power source and input power supply (power supply at facility side).

**⚠ WARNING**

- **When the welding power source is used in a humid environment such as construction site, or location with highly conducting material such as steel plate or on steel structure, install a leakage breaker.**
  **Otherwise, electric shock due to leakage of electricity may occur.**
- **Be sure to install a switch with fuse or a circuit breaker (for motor) to the input side of each welding power source.**
  **Otherwise, electric shock and fire due to overcurrent or damage to the welding power source may occur.**
- **If the welding power source which is not grounded is used, voltage will be generated in the case through the capacitor between the welding power source input circuit and the case or floating capacity (electrostatic capacity naturally generated between the input conductor and the case metal). If you touch the case, you may suffer from electric shock. Be sure to ground the case of the welding power source.**
- **Be sure to connect the input cable (3 pcs) in the correct position and securely tighten them to the terminal block.**
  **Improper connection may cause electric shock, fire, and damage to the welding powersource.**

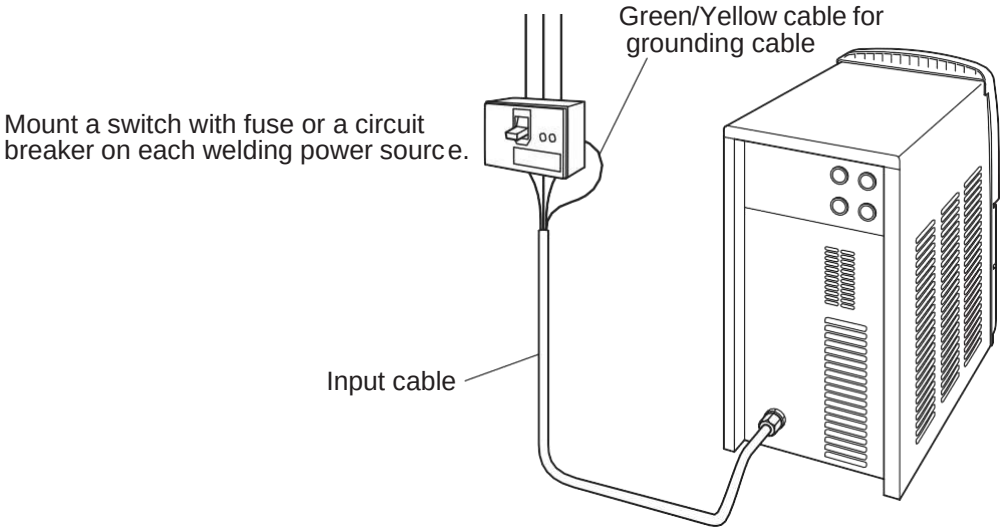


**STEP**

1. **Check that input power is turned off with the disconnect switch connected to the welding power source.**
2. **Perform grounding work for welding power source.**
   - Grounding cable: AWG12 (4.0 mm²) with 0.4" Φ (10 mmΦ) terminal × 1

   * The grounding cable is a striped pattern in yellow and green.

3. **Connect the power cables (3 pcs) to the output terminals of power source at facility side.**
   - Input cable: AWG12 (4.0 $mm^2$) with 0.4" Φ (10 mmΦ) terminal × 3

Grounding and connection of input power supply is complete. Procedure is followed by 4.4 Confirmation of Connection.

## 4.4 Confirmation of Connection

This section explains the point of confirmation after completing all of the connections. Check for the following after the connection is complete.

- No looseness in the cable connections
  If looseness is found, tighten it to secure the connection.
- No cable of other equipment is connected to the breaker to which input cable of the welding power source is connected.
  Connect only the cable of the welding power source to the breaker.
- Capacity of the switch and the rating of fuse and circuit breaker are appropriate. (☞ 3.1.1 Welding power source equipment)
- Perform grounding for the case of the welding power source.
  Ground terminal is properly grounded when grounding cable of the welding power source is connected to the breaker's ground terminal.
- No tools are left or equipment are placed on the surface of the welding power source.
  Do not place any material on the surface of the welding power source.

## 4.5.1 Connection of automatic machine

This section explains the procedure for connection of automatic machine with the welding power source.

### 4.5.1.1 Wiring for connecting automatic machine

The welding power source is equipped with terminal block for external connection inside the cover for external connection at the rear. When connecting to the automatic machine, use this terminal block for external connection.

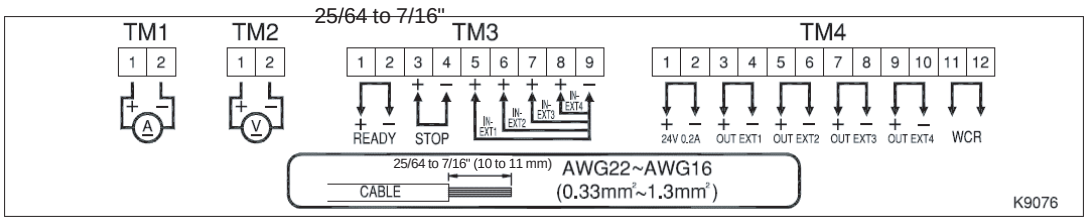


| Terminal No. | | Signal name | | Function |
|---|---|---|---|---|
| TM1 | 1-2 | A | Output for ammeter | Output terminal to connect a separately sold Ammeter (600 A / 60 mV) Part No. :4403-054 |
| TM2 | 1-2 | V | Output for voltmeter | Output terminal to connect a separately sold Voltmeter (100 V F.S.) Part No. : 4401-019 |
| TM3 | 1-2 | READY | Power ready output | When the welding power source side is ready to start welding, the contact between the terminals closes. When an error is detected, the contact opens. |
| | 3-4 | STOP | Operation stop input | Disconnecting the terminals stops output of the welding power source. When combining switches, use a push-lock, turn-reset switch for preventing accidental reset. |
| | 5-9 | IN-EXT1 | External input 1 | Reserve inputs for expanding terminal functions. Setting the internal functions (Function) allows you to externally open and close the gas valve and perform inching operation. (☞ 6.7 Setting Internal Functions) |
| | 6-9 | IN-EXT2 | External input 2 | |
| | 7-9 | IN-EXT3 | External input 3 | |
| | 8-9 | IN-EXT4 | External input 4 | |
| TM4 | 1-2 | 24 V 0.2 A | 24 V power source | Outputs power supply of 24 V. Current capacity: 0.2 A (Maximum) |
| | 3-4 | OUT EXT1 | External output 1 | Reserve outputs for expanding terminal functions. No function is allocated in the standard specification. (☞6.7 Setting Internal Functions) |
| | 5-6 | OUT EXT2 | External output 2 | |
| | 7-8 | OUT EXT3 | External output 3 | |
| | 9-10 | OUT EXT4 | External output 4 | |
| | 11-12 | WCR | WCR output | When welding current is detected, the contact between the terminals closes. |

- <u>Input signal of the external connection terminal block</u>
  Use switches and relays with contact capacity of 24 V/10 mA or more for connecting with the input terminal.

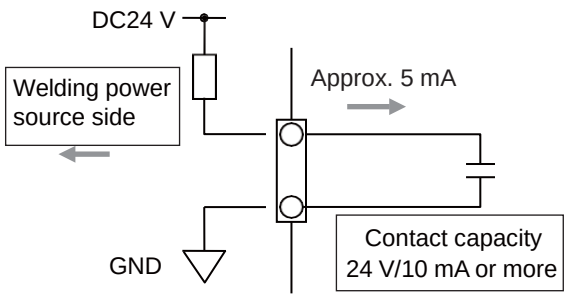

- Output signal of the external connection terminal block
  Output signal is open collector output. Ensure to keep the maximum rated power of the transistor.

  Maximum rated power of transistor
  READY: DC50 V/100 mA
  OUT EXT1 to 4: DC50 V/100 mA

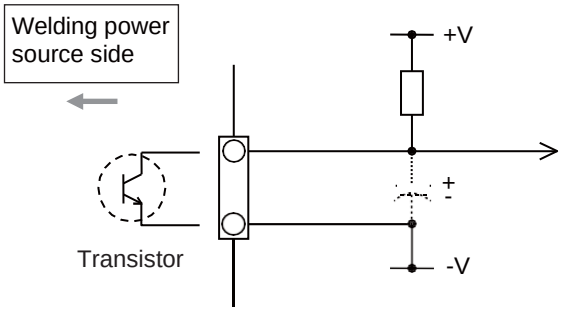


- WCR output signal
  WCR signal is the output of relay contact. Ensure to keep the maximum rated power of the contact.

  Maximum rated power of relay contact
  WCR: DC80 V/100 mA

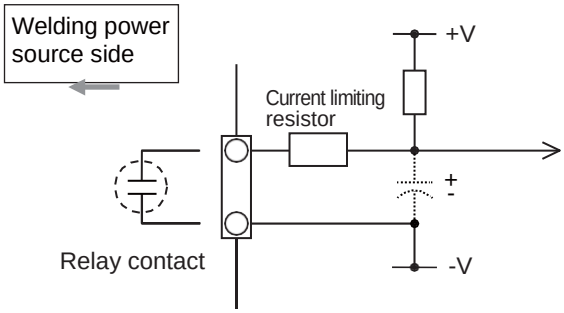


**NOTE**

- Connect welding power source and target device after carefully read the instruction manual of target device. Add current limiting resistor if capacitor is connected to the contact of target device.

### 4.5.1.2 Connection of terminal for external connection

This section explains the procedure for connection to the terminal for external connection.

**⚠ WARNING**

To prevent electric shock, ensure to follow the instructions below:

- Wiring should be performed by qualified persons or persons familiar with the welding machine.
- Do not touch the input and output terminals and the internal live electrical parts of the welding power source.
- Before starting the work, make sure to cut the input power with the disconnect switch connected to the welding power source and wait three minutes or more. In addition, do not turn on the primary power until the work is complete.
- Do not use damaged cable or cable without grounding.
- Securely attach the case and cover of the welding power source after connecting the cables.

Use the following cable for connecting to the terminal for external connection:

- Cable thickness: AWG22 to AWG16 (0.33 to 1.3 $mm^2$)
- Using a cable or terminal not specified will be a cause of heat generation and fire. Furthermore, cable other than specified cannot be connected to the terminal for external connection.

## ⚠ CAUTION

- **The control cable drawn out from the terminal for external connection should be kept away from the welding power cable or the torch cable as much as possible. Otherwise, failure may occur due to noise during use.**
- **Do not pull out the cables other than the cable that is connected with the terminal block on the printed circuit board. Malfunction or error may occur.**

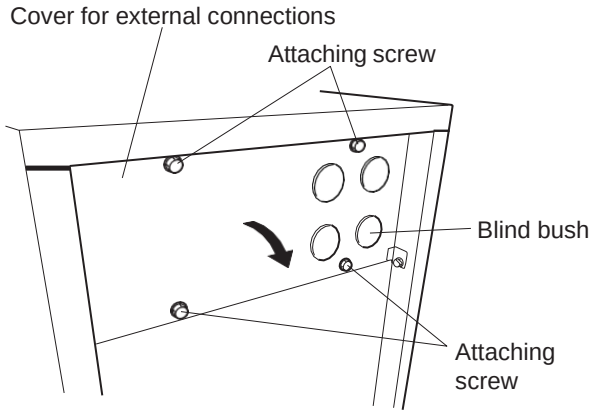


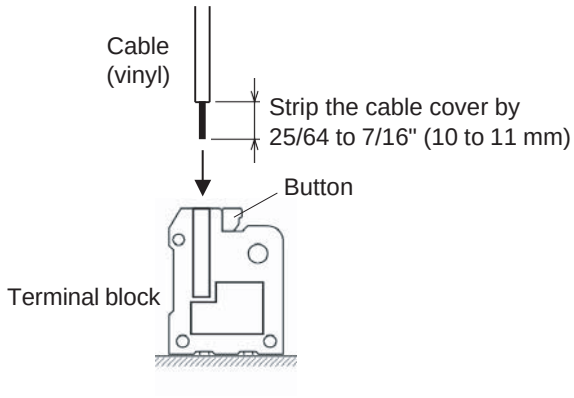


**STEP**

1. **Check that input power is turned off with the disconnect switch connected to the welding power source.**
2. **Remove the attaching screws and open the cover for external connection.**
3. **Include a cutting in a cross mark at the blind bush using a knife and pass the cable through.**
   - Process any given blind bush among the several available types.
4. **Connect the cable to the terminal for external connection.**
   - Strip the cable cover by 25/64 to 7/16" (10 to 11 mm) from the end while pressing the button on the terminal block and insert the cable.
5. **Check the wiring and place the cover for external connection back to the welding power source.**

# 4.5 Wiring of Voltage Detection Cable at Base Metal Side

When the extension cable is 118.1" (30 m) or more in length in total, use of the voltage detection cable at the base metal side is recommended.
The voltage detection cable needs to be wired so that the correct feedback of the arc voltage can be obtained. Connect the voltage detection cable as near as possible to the base metal to avoid detection of voltage decrease.
Use the voltage detection cable at base metal (optionally available: K5416N00 or K5416G00) by connecting with the wire feeder or to the voltage direct detection terminal at the base metal side on the front of welding power source.
When using the voltage detection cable, set the internal function F38 to "ON". (☞ 6.7.1 Setting procedure)
Details on the internal function F38 (☞ 6.7.2.21 F38: Arc voltage direct detection switching)

**⚠ WARNING**

- **Ensure to start the operation only after shutting off the input power by the contactor of the power distribution box connecting the welding power source. Otherwise, electric shock may occur.**

## 4.6.1 Wiring to wire feeder

This section explains how to connect the voltage detection cable at the base metal side to the wire feeder.

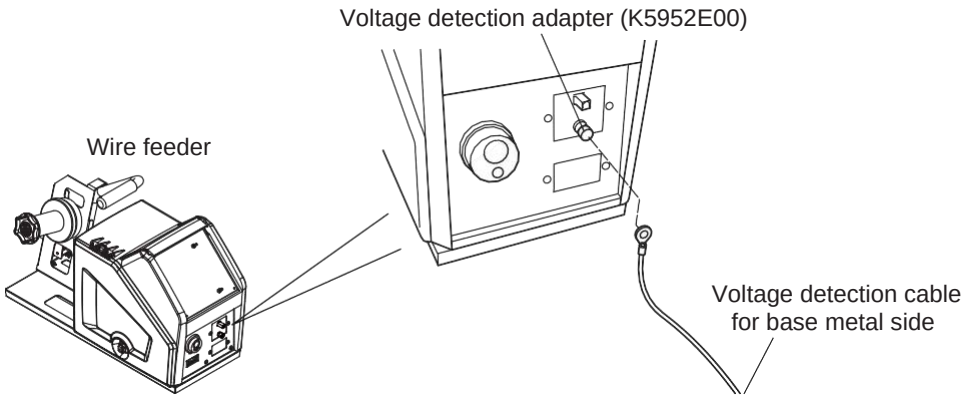


**STEP**

1. **Check that input power is turned off with the disconnect switch connected to the welding power source.**
2. **Connect the voltage detection cable at the base metal side to the terminal board in the front of wire feeder.**

● **If you use wire feeder "CM-7403", you need a voltage detection adapter "K5952E00". If you use wire feeder "CMV-7403", you don't need a voltage detection adapter. Please refer to the owner's manual of wire feeder for the details.**

## 4.6.2 Wiring to welding power source

This section explains how to connect the voltage detection cable at the base metal side to the voltage direct detection terminal at the base metal side of the welding power source.

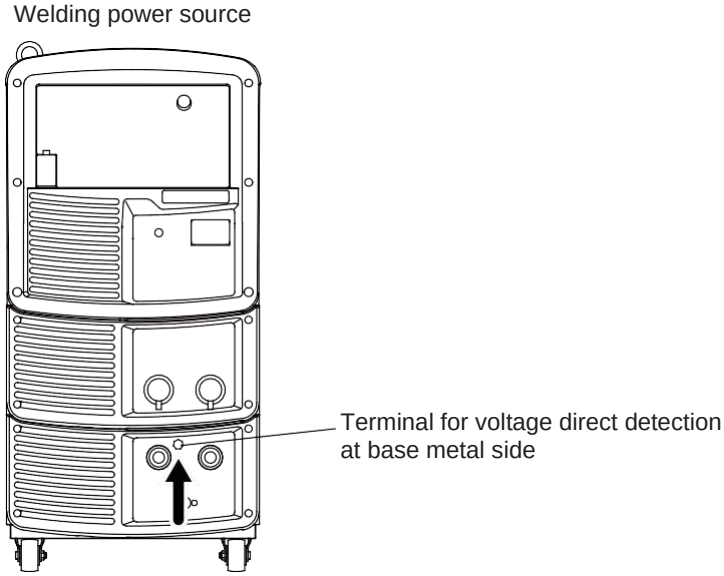


STEP

1. **Check that input power is turned off with the disconnect switch connected to the welding power source.**
2. **Connect the voltage detection cable at the base metal side to the voltage direct detection terminal at the base metal side.**

Wiring of voltage detection cable is complete.

## 4.6.3 Wiring example of voltage detection cable

This section shows the wiring examples of the voltage detection cables at the base metal side to the base metal.

### 4.6.3.1 Wiring examples for plural welding stages

Connect the voltage detection cable at the base metal side to the stage to which the cable on the base metal side was last connected.

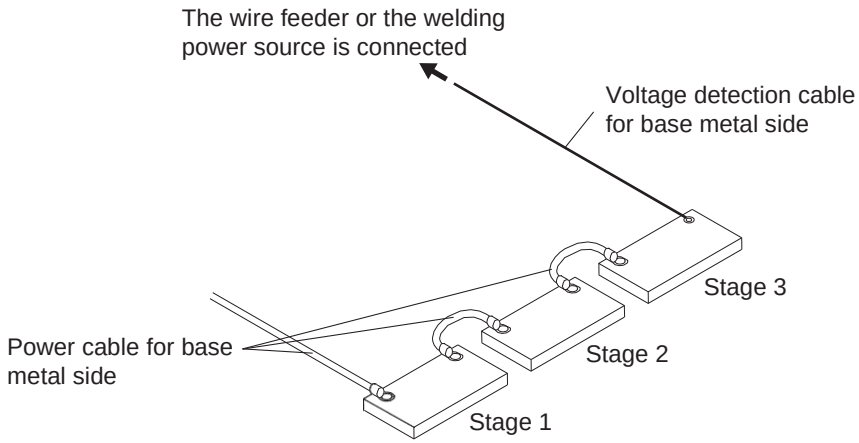


### 4.6.3.2 Wiring example when power is supplied with a power feeding brush to the positioner

Insulate the power feeding brush from the jig base and connect the voltage detection cable (base metal side) to the jig base.

**TIPS**

- **Before wiring the voltage detection cable, check that conduction between the jig base and the base metal is stable.**

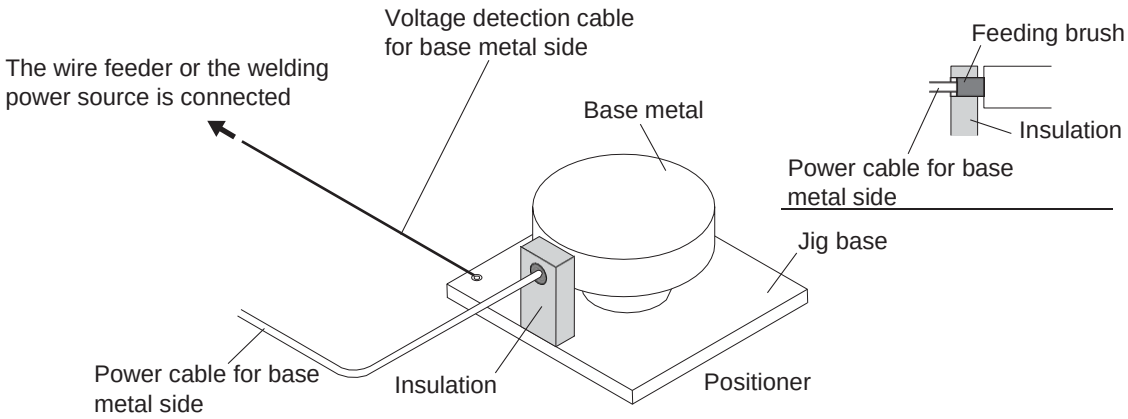

# Chapter 5 Welding Operation

This chapter explains the procedures from preparation to completion of the welding operation.

## 5.1 Precaution at Welding Operation

This section explains the safety precautions for welding operation.

### 5.1.1 Precautions for air discharge and use of respiratory protective equipment

To prevent suffocation or gas poisoning in the welding operation, ensure to follow the instructions below:

**⚠ WARNING**

- When welding is required in tank, boiler, reaction tower, or hold of a ship, closed space, or any other places of poor ventilation, ensure to provide ventilation equipment.
- Gas of larger gravity than that of oxygen, such as carbon dioxide gas or argon gas, retains at the bottom part.
  To prevent anoxia due to the retention gas, provide ventilation equipment.
- When it is difficult to provide ventilation equipment or the ventilation equipment does not give sufficient performance, ensure to use respiratory protective equipment.
- For preventive measure from falling due to anoxia, apply lifelines such as a safety belt.
- For the welding operation in a narrow space, perform the operation with the trained supervisor.
- Periodically inspect the ventilation equipment to ensure correct and proper performance of ventilation.

To prevent any health damage due to poisonous gas or particle substances (fume) emitted in the welding operation, ensure to follow the precautions below:

**⚠ WARNING**

- To reduce the dust concentration, install a partial exhaust facility such as fume suction device, or install the collective ventilation equipment.
- When it is difficult to provide a partial exhaust facility or the ventilation or exhaust facility does not give sufficient performance, ensure to use the respiratory protective equipment.
- In performing welding or cutting the coating steel plate or galvanized steel sheet, provide a partial exhaust facility or let the welding operator as well as the surrounding operators use respiratory protective equipment. (Welding or cutting the coating steel plate or galvanized steel sheet will cause toxic gas or fume.)
- Do not perform welding operation in the vicinity of degreasing, cleansing, or spraying operation. Performing the welding operation in such places may generate poisonous gas.

### 5.1.2 Precaution for protective equipment

For protection from arc ray generated from welding, spatter and spattering dross and hearing disorder from noise, observe the following:

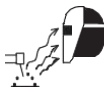

**⚠ WARNING**

- **Wear safety goggles with sufficient blocking effect or face shield in the work area and the surrounding.**
  **Ignoring the above may cause inflammation and burn from arc ray.**
- **Wear safety goggles in the work area and the surrounding.**
  **Ignoring the above may cause injury in the eye or burn from spatter and spattering dross.**
- **Wear protective equipment such as protective leather gloves, long-sleeve clothes, leg covers, and leather apron.**
  **Ignoring the above may cause electrical shock and burn.**
- **Install protective screens or barriers to protect the eyes of others in the work area from arc ray.**
- **Wear an ear protector when noise level is high.**
  **Ignoring the above may cause hearing disorder.**

### 5.1.3 Precautions on welding place

To avoid poor welding, ensure to follow the instructions below:

**⚠ CAUTION**

- **When the welding is performed outside with wind or when wind is caused by the indoor ventilation facility (including fan), provide a partition to avoid the arc generating part being exposed to wind.**

## 5.2 Check before Welding

This section explains the check parameters before welding. To avoid welding problems beforehand, check the parameters below when the welding environments are prepared. (These are the check parameters recommended by Gedik Welding. They also contain check parameters after power ON or after shieldgas supply.)

For handling the cooling water circulation device, refer to the instruction manual of the cooling water circulation device. (When using the water-cooled welding torch)

| | Check parameter | Countermeasures | Check |
|---|---|---|---|
| 1 | There should be no loose connections of the cables. | Use a proper tool to ensure connection. | |
| 2 | There should be no dirt such as oil or spatter adhering on the connection terminals or connection part of cables. | Wipe off dirt so that the metal face of connection terminal or connection part is fully exposed. Using a metal brush is effective. | |
| 3 | There should be no tightening together of the voltage detection cable (base metal side) and the cable at the base metal side. | Connect the voltage detection cable (base metal side) and the cable at the base metal side separately to a different location.<br>Each cable should be connected to the position near to the workpiece to be welded. | |

| | Check parameter | Countermeasures | Check |
|---|---|---|---|
| 4 | The voltage detection cable should be adequately wired. | The voltage detection cables at the base metal side and the torch side should be wired along each other.<br>Keep the voltage detection cable (base metal side) at least 3.9" (10 cm) away from the cable at the base metal side. | |
| 5 | The voltage detection cable should not be damaged. | If any damage is suspected, use a tester to measure the resistance between the voltage detection cables.<br>When the resistance is 0.01 Ω or more, replace the voltage detection cable with a new one. | |
| 6 | The contact part of jig and welding work piece should not be painted. | Painted contact part could cause increased contact resistance, resulting in decrease in arc voltage. Polish the painted contact part using a grinder to expose the metal face. | |
| 7 | The contact part of jig and welding work piece should be free from unevenness due to influence of burn through, spatter, or aging deterioration. | Polish the surface of the jig using a grinder so that the welding workpiece and the jig can fully contact each other. | |
| 8 | The mixing ratio of shielding gas should be adequate. | $CO_2$High $CO_2$- concentration could increase the spatter generation.<br>For shield gas, follow the mixing ratio as follows:<br>MAG gas : Argon (Ar) 80 % + Carbon dioxide ($CO_2$) 20 %<br>MIG gas : Argon (Ar) 97.5 % + Carbon dioxide ($CO_2$) 2.5 %)<br>MIG gas (Stainless) : Argon (Ar) 98 % + Oxygen ($O_2$) 2 %<br>MIG gas (Aluminum/ Aluminum bronze /Silicon bronze) : Argon (Ar) 100 % | |
| 9 | The shielding gas should be correctly mixed. | Use a mixer. If welding is unstable, use pre-mix gas to check if the welding condition is improved. | |
| 10 | The flow rate of shielding gas should be adequate. | Ensure the adequate shield gas flow rate as follows:<br>MAG gas : 21 to 53 CFH (10 to 25 L/min)<br>MIG gas : 32 to 53 CFH (15 to 25 L/min) | |
| 11 | When the shield gas is mixed, each gas pressure should be the same. | Set pressures of the respective gas to the same level. | |
| 12 | Oil or other dirt should not be adhered on the welding wire. | Consider a measure to wipe off the dirt. | |
| 13 | In the $CO_2$- and MAG welding, the particle diameter of wire tip at the welding completion should not excessively be large or small. | Adjust anti-stick voltage so that the wire tip particle size becomes 1.2 to 1.5 times of the wire diameter. If the particle size is smaller than the above, set the anti-stick voltage to a higher value, whereas if the particle size is larger than the above, set the anti-stick voltage to a lower value. | |
| 14 | At start point of welding, the tip of welding wire and the welding workpiece should not be contacted.<br>(When using a robot, operate several times with "welding OFF" and confirm that the welding wire and the welding workpiece do not contact each other.) | If the wire tip contacts with the welding workpiece, set anti-stick voltage to a higher value to increase meltage of the welding wire at the end of welding.<br>If anti-stick voltage is set to a value higher than the appropriate range, the wire tip particle size becomes excessively large, resulting in poor start performance of the next welding. | |
| 15 | The tip of the welding torch should not be worn. | Visually check the hole diameter of the tip. If it is 1.2 times or larger than the hole diameter of a new tip, or when the tip is discolored, replace it with a new one. | |
| 16 | In wire feeding, pressure roll should not be idled, and the wire reel should rotate smoothly. | Adjust the pressure level of wire feeder. If it is not improved, check for other factor that generates overload on wire feeding. (☞ See parameter 12, 17, 18) | |
| 17 | The groove of feed roll should not be dirty. | Clean the dirty groove with a wiry tool. | |
| 18 | There should be no large feeding resistance of wire.<br>(With the pressurized holder of the wire feeder held up, hold the tip of welding wire with a plier, and try pulling it out; if smoothly pulled out, it is adequate.) | Ensure that the torch cable has no bending at a sharp angle.<br>If the liner is clogged with dirt or when inched wire has flaw, replace the liner with a new one.<br>(In replacing the liner, follow the precautions on the attached manual of welding torch for appropriate handling.)<br>In cutting the liner, take care for the followings:<br>If the liner is too long: feeding resistance increases, resulting in shorter life of wire feeder.<br>If the liner is too short: feeding failure occurs. | |

# 5.3 Power ON and Gas Supply

This section explains how to supply power and shield gas.

**⚠ WARNING**

- **Handle the gas cylinder according to the related laws or regulations as well as the internal standard of the customer.**
  **Note that the gas cylinder contains a high-pressure gas. Wrong operation may cause gas explosion, resulting in serious physical injury.**
- **In opening the valve of gas cylinder, keep your face away from the gas discharge port. If the connection should be loose, high-pressure gas may burst out.**
- **Keep your hands, fingers, hairs and clothes away from the rotating cooling fan and the open parts around the cooling fan;**
  **it could result in entanglement with the internal fan.**

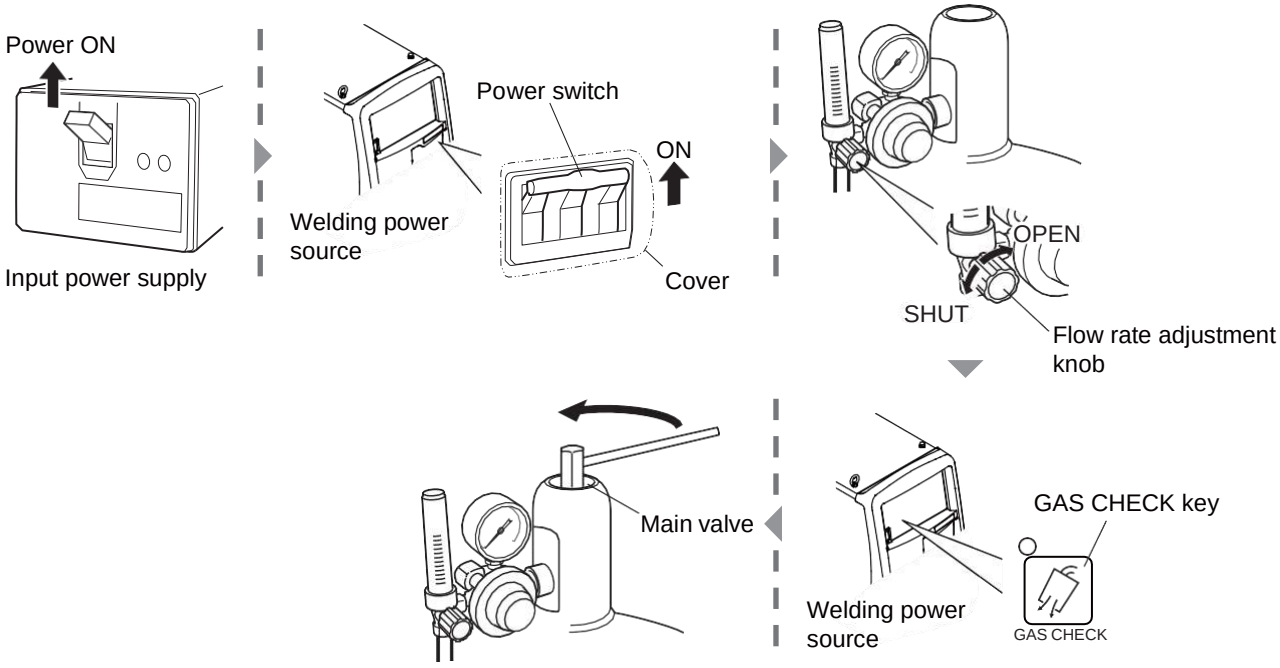


**STEP**

1. **Supply the input power.**
   - Operate the disconnect switch to supply the input power.
   - * The power LED switch lights up.
2. **Turn ON the power switch of the welding power supply.**
3. **Check that the flow rate adjustment knob is set to "SHUT" and press the GAS CHECK key.**
   - * The LED of the GAS CHECK key lights up, turning to the gas check status (shield gas is discharged).
   - * The gas check status continues for approximately 2 minutes, and automatically stops. To stop the gas check during the sequence, press the GAS CHECK key again to turn off the LED light.
4. **Open the main tap of shield gas.**
   - When the gas regulator is equipped with a pressure gauge, open the main tap by checking the pressure gauge until the appropriate pressure is obtained.

5. **Turn the flow rate adjustment knob to "OPEN" and adjust the flow rate of shield gas.**
6. **Press the GAS CHECK key.**

   * The LED of the GAS CHECK key lights off, to stop gas check.

## 5.4 Wire Inching

This section explains the inching operation (feeding operation) of the wire.

**⚠ WARNING**

- **Do not look into the tip of the welding torch during the inching operation. Do not bring the tip of the welding torch to face, eyes, or body.**
  **The wire may abruptly burst out, resulting in an injury.**
- **Keep hands, fingers, hair and clothes away from the feed roll of the wire feeder.**
  **It may cause an entanglement.**

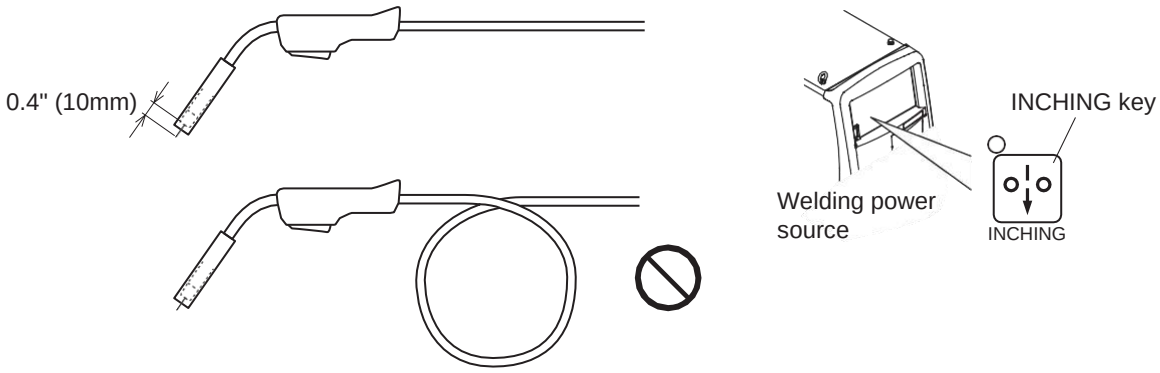


**STEP**

1. **Straighten the torch cable.**

   * Bent cable may cause feeding failure of the wire or wire bending.

2. **Press the INCHING key to feed the wire.**

   ● Keep pressing the INCHING key key until the wire protrudes from the end of the tip in approximately 0.4" (10 mm). Releasing the INCHING key will stop the wire feeding. For excessive wire, cut the wire using a plier.

   * Turning the parameter adjusting knob during the wire feeding can adjust the feed speed.

**TIPS**

- **Wire feeding is also enabled by a remote control (optional). Turning the welding current adjustment knob can adjust the feed speed. (☞ 6.8 Operation of Analog Remote Control (Optional))**

# 5.5 Check and Setting of Welding Condition

This section explains how to check the welding condition as well as how to prevent erroneous operation on the operation panel (Erroneous operation prevention function).

## 5.5.1 Reading welding condition

Before starting the welding operation, it is necessary to set the welding conditions (such as welding current/voltage, type of shield gas, and wire type/wire diameter). ( ☞ 6.4 Preparing Welding Conditions)

When the welding conditions are registered to memory, it can be read out. (☞ 6.5 Memory Function of Welding Conditions)
When the condition is read, confirm that the welding conditions are correct.

## 5.5.2 Preventing erroneous operation on operation panel

This section explains how to prevent erroneous operation on the operation panel.
To prevent accidental change of the welding conditions, the erroneous operation prevention function is equipped for the operations other than inching, gas check, or reading / saving of the welding condition. In using the analog remote control, however, the adjustment of current /voltage by the analog remote control is available.

The erroneous operation prevention function does not need any password to release the lock. To allow only selected personnel to change the welding conditions, use the protection function of the welding conditions which requires a password. (☞ 7.1 Protection of Welding Conditions)

### 5.5.2.1 Activating erroneous operation prevention function

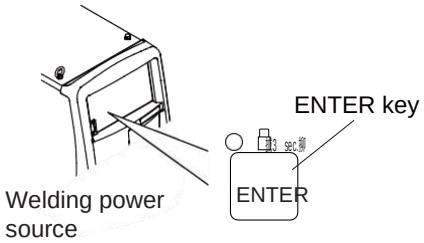


STEP

1. **Press and hold the ENTER key for approximately three seconds or more.**
   * When the erroneous operation prevention function is activated, the LED of the ENTER key flashes.

#### 5.5.2.2 Deactivating erroneous operation prevention function

STEP

1. **Press and hold the ENTER key for approximately three seconds or more again.**
   * The LED of the ENTER key lights off, which deactivates the erroneous operation prevention function.

**TIPS**

- **Turning the power switch OFF does not deactivate the erroneous operation prevention function.**
- **Initializing the welding condition and the internal function deactivates the erroneous operation prevention function.**
  **(☞ 7.4 Initializing Welding Conditions and Internal Functions)**

## 5.6 Performing Welding Operation

This section explains the procedure from the start to the end of the welding operation.

### 5.6.1 Operation of welding start

**⚠ CAUTION**

- **In using the welding power source for TIG welding, prepare a welding torch for TIG welding by the customer.**
- **Perform the switch operation to TIG welding by the WELDING METHOD key when the torch electrode is not contacted with the base metal.**

STEP

1. **Check that the welding conditions are correctly set and operate the torch switch to start the welding. (☞ 6.6.3 Crater setting)**
   - During the welding, the welding current is displayed on the left digital meter and the welding voltage is displayed on the right digital meter both in a real time basis. This indication is the average value of the output per approximately one second.
   - In TIG welding, arc start requires contact of the torch electrode with the base metal.
   - In DC STICK welding, arc start requires setting of the welding electrode in the electrode holder, and contact of the electrode with the base metal.
2. **A series of welding operation is completed by the torch switch operation. ( ☞ 6.6.3 Crater setting)**
   - At the end of welding, the average value of the welding current and the welding voltage at the last second of the welding sequence is displayed on each digital meter in a flashing mode. (except for the output at crater)
   * Pressing any key on the operation panel during the flashing display will change the indication to the set value.
   * The duration of flashing display can be changed by the internal function (F8).
   * When the welding time is short such as in the tuck welding, accurate value may not be displayed.

**TIPS**

- **The displayed average value is processed by the software. Note that the value cannot be guaranteed as the control data for a measurement instrument.**

## 5.6.2 Operation during welding

This section explains the operation requiring adjustment of welding current / voltage during the welding. The welding current /voltage can be adjusted during each sequence such as welding under initial condition, welding condition, or crater condition.

**TIPS**

- **When the analog remote control (optional) is connected, the welding current/voltage under the welding condition cannot be adjusted on the operation panel. Adjust the welding current/voltage for the welding condition at the analog remote control.**

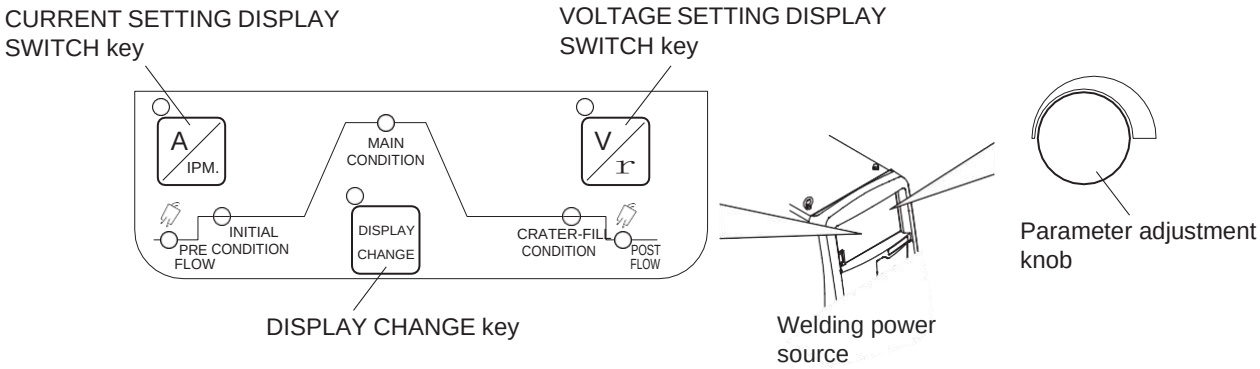


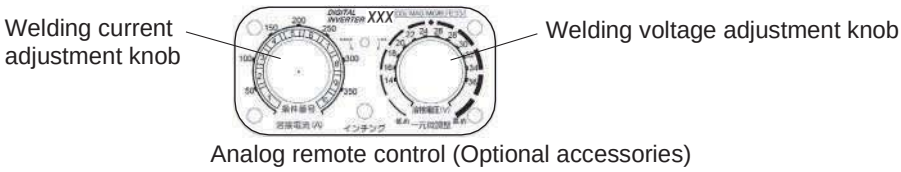


**STEP**

1. **Press the DISPLAY CHANGE key.**

   * The displays of the left /right digital meter switches to the set values.

2. **Adjust the welding current.**

   - When the LED of the CURRENT SETTING DISPLAY SWITCH key is off, press the CURRENT SETTING DISPLAY SWITCH key to light up the LED. (In the adjustment by the remote control, this operation is not necessary.)
   - Turn the parameter adjustment knob (for the remote control, the welding current adjustment knob) to adjust the welding current.

3. **Adjust the welding voltage.**

   - When the LED of the VOLTAGE SETTING DISPLAY SWITCH key is off, press the VOLTAGE SETTING DISPLAY SWITCH key to light up the LED. (In the adjustment by the remote control, this operation is not necessary.)
   - Turn the parameter adjustment knob (for the remote control, the welding voltage adjustment knob) to adjust the welding voltage.

4. **Press the DISPLAY CHANGE key.**

* The displays on the left/right digital meters return to the display of current/voltage in welding.

**TIPS**

- **When no operation is performed for approximately 5 seconds, the display will return to the one showing current/voltage in welding.**
- **Using the internal function (F48) enables to increase/decrease the welding current by the torch switch operation. (It is available only with the crater set to on and in the welding condition.) (☞ 6.7 Setting Internal Functions)**
- **When the LED of the VOLT. ADJUST key is lit (CONSTANT penetration), the voltage is automatically set to the value according to the current. (☞ 6.6.2.2 Welding parameter setting)**

## 5.6.3 Operation at welding end

This section explains the supply stop procedure of power/shield gas after the welding end.

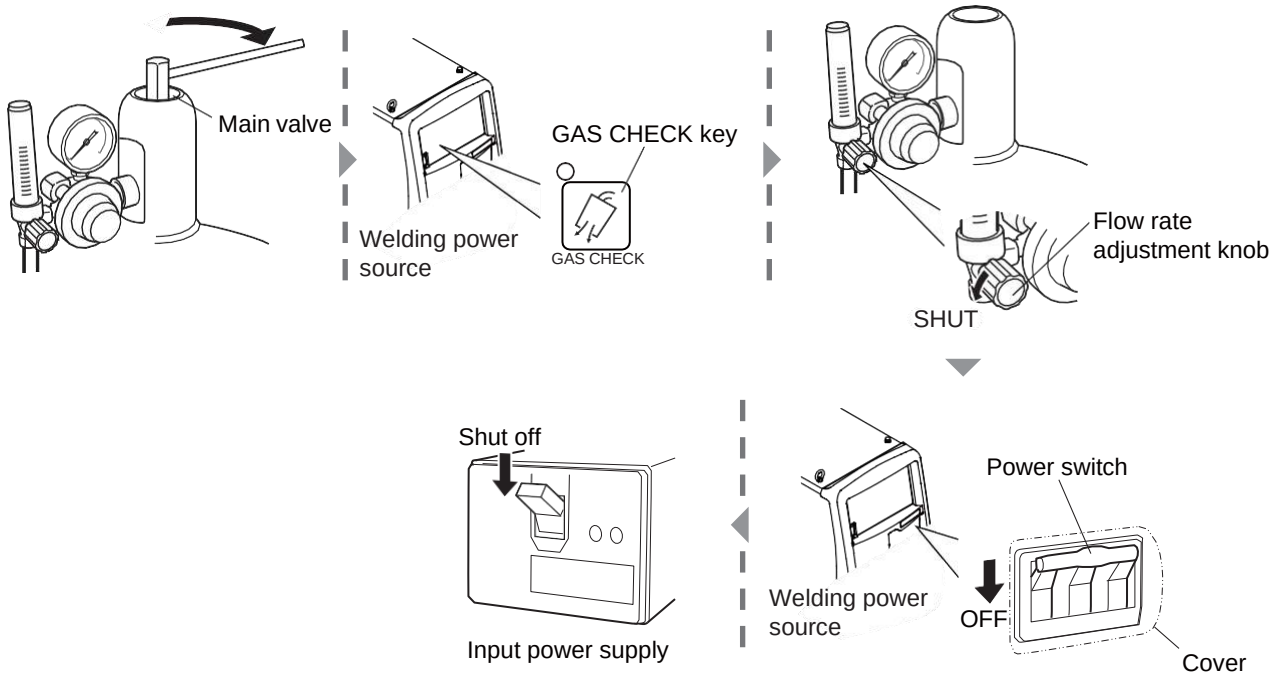


STEP

1. **Close the main tap of the shield gas.**
2. **Press the GAS CHECK key.**
   - The LED of the GAS CHECK key lights up, and the shield gas remained in the gas piping is discharged.
3. **After the shield gas is discharged, press the GAS CHECK key.**
   - The LED of the GAS CHECK key lights off, to stop gas check.
4. **Set the flow adjustment knob to “SHUT", to adjust the shield gas flow rate to zero.**
5. **Turn OFF the power switch of the welding power supply.**
   - The power LED switch lights off.
6. **Shut off the input power.**
   - Operate the disconnect switch to shut off the input power.

# Chapter 6 Welding Condition

This chapter explains the functions on the operation panel as well as how to set the welding conditions.

## 6.1 List of Welding Conditions

This section explains the parameters/functions settable in the welding power source.

### 6.1.1 Parameter (Welding parameter)

| Parameter | | Set Range | Initial Value | Descriptions |
|---|---|---|---|---|
| Pre-flow time | | 0 to 10 sec | 0.1 sec | Set the gas discharge time before welding starts. |
| Initialized condition/ Main condition/ Crater condition | Current | 20 to 400 A<br>10 to 400 A<br>(for TIG welding)<br>20 to 300 A<br>(for DC STICK welding) | 150 A | Initial Condition: set the current and voltage value soon after the welding.<br>Welding condition: set the current and voltage value during the welding.<br>Crater condition: set the current and voltage value at the end of welding. |
| | Voltage (INDIVIDUAL) | 10.0 to 40.0 V | 23.5 V | |
| | Voltage (SYNERGY) | -100 to 100 | 0 | |
| Post-flow time | | 0 to 10 sec | 0.4 sec | Set the gas discharge time after the welding ends. |
| Arc spot time | | 0.1 to 10 sec | 3 sec | Set the welding time at arc spot. |
| Arc characteristics | | -10 to 10 | 0 | Set the arc to the condition from soft to hard. |
| Welding condition memory No. | | 1 to 100 | 1 | Register the welding conditions (storable up to 100). |
| Wave frequency | | 0.5 to 32.0 Hz | 3.0 Hz | Set the wave frequency at wave pulse. |
| EN ratio | | -50 to 50 | 0 | Set the EN ratio at the time of AC welding. |

### 6.1.2 Function

| Function | Initial value | Setting parameter |
|---|---|---|
| CRATER-FILL | CRATER-FILL-OFF | CRATER-FILL-OFF / CRATER-FILL-ON / CRATER-FILL-ON (REPEATED) / ARC SPOT |
| GAS | MIG (100% Ar) | MIG (100% Ar) / MIG (2.5% $CO_2$) / MIG (2% $O_2$) / MAG (20% $CO_2$) |
| WIRE MATERIALS | Al/Mg | SOFT ALMINIUM / HARD ALMINIUM / Brazing Cu Si / Brazing Cu Al / MILD STEEL / MILD STEEL CORED / STAINLESS STEEL / STAINLESS FERRITE / STAINLESS CORED / INCONEL / TITANIUM |
| WELDING METHOD | AC PULSE | AC PULSE / AC WAVE PULSE / DC PULSE / DC WAVE PULSE / DC TIG |
| WIRE DIA. [in.(mm)] | .045 (1.2) | .030 / .035 / .040 / .045 / .052 / 1/16 (0.8/0.9/1.0/1.2/1.4/1.6) |
| INITIAL CONDITION | OFF | ON/OFF |
| VOLT. ADJUST | INDIV. | SYNERG. / INDIV. |

PoWer MIG GPS WB 400 AC DC.pdf 1 14.12.2021 10:51



## 6.1.3 Internal function

Details of internal function (☞ 6.7 Setting Internal Functions )
The functions with circle mark (O) on the Memory row can be stored with the welding conditions.

| No. | Function Name | Setting range | Initial value | Explanation | Memory |
|---|---|---|---|---|---|
| F1 | No function | OFF (fixed) | OFF | No functions are provided. | - |
| F2 | Switch of AC start | 0.00 to 2.00 | 0.30 | Sets the switching time to start AC welding in the AC welding. | - |
| F3 | No function | OFF (fixed) | OFF | No functions are provided. | - |
| F5 | Maximum external command voltage | 10.0/14.0/15.0 | 15.0 (V) | Sets the maximum value of voltage supplied when current/voltage command is externally input. | - |
| F6 | Up slope time | 0.0 to 10.0 | 0.0 (s) | Sets the slope time from the initial condition to the welding condition. | |
| F7 | Down slope time | 0.0 to 10.0 | 0.0 (s) | Sets the slope time from the welding condition to the crater condition. | |
| F8 | Welding result display time | 0 to 60 | 20 (s) | Sets the display time for the current/voltage after completion of welding. | - |
| F9 | Analog remote control scale | 200/350 | 350 (A) | Configures the settings of scale plate of the analog remote control. | - |
| F10 | Motor over current detection level | 20 to 150 | 70 (%) | Sets the over current warning level for the rated current of the wire feed motor. | - |
| F11 | Fine adjustment of welding conditions memory | OFF/1 to 30 | OFF | Allows fine tuning the current and voltage of welding conditions stored on the memory using the analog remote control.<br>OFF: No fine adjustment<br>1 to 30 (%): Fine adjustment is performed (Maximum adjustment range at this time can be set in percentage) | - |
| F12 | No function | OFF (fixed) | OFF | No functions are provided. | - |
| F13 | | | | | |
| F14 | Start control time adjustment | -50 to 50 | 0 (%) | Adjusts the control time of current at the time of start. | - |
| F15 | Start control current adjustment | -100 to 100 | 0 (A) | Adjusts the control of current at the time of start. | - |
| F16 | Slow-down speed adjustment | -39 to 39<br>(-1.0 to 1.0) | 0.0 [IPM (m/min)] | Adjusts slowdown speed. | |
| F17 | Anti-stick time adjustment | -50 to 50 | 0 (10ms) | Allows fine tuning meltage of the wire at the end of welding based on the anti-stick process time. | |
| F18 | Anti-stick voltage adjustment | -9.9 to 9.9 | 0.0 (V) | Allows fine tuning meltage of the wire at the end of welding based on the anti -stick process voltage. | |
| F19 | Alarm setting switching | OFF/ON | OFF | Sets the output status when an error of the alarm level is detected:<br>OFF: Ineffective<br>ON: Stops the output | - |
| F20 | Low input voltage detection level | 320 to 460 | 370 (V) | Adjusts the low primary input voltage detection level. | - |

| No. | Function Name | Setting range | Initial value | Explanation | Memory |
|---|---|---|---|---|---|
| F21 | Maximum cooling fan operation | OFF/ON | OFF | Sets the operation mode of cooling fan:<br>OFF: Economical operation<br>ON: Rotates the fan at maximum speed at all time | - |
| F22 | Operation sound switching | OFF/ON | ON | Sets the operation sound when any key is pressed on the operation panel:<br>OFF: Turns off the sound<br>ON: Turns on the sound | - |
| F23 | Sleep mode switching time | 0 to 10 | 0 | Sets the time until the welding power source enters into sleep mode:<br>0: OFF<br>1 to 10: 1 min to 10 min | - |
| F24 | Wire feeding speed setting | OFF/ON | OFF | Sets the criteria for welding condition:<br>OFF: based on current<br>ON: based on wire feeding speed | - |
| F25 | External output 1 setting | 0/4 | 0 | Sets the functions of input terminal of the programmable I/O. | - |
| F26 | External output 2 setting | | | | |
| F27 | External output 3 setting | | | | |
| F28 | External output 4 setting | | | | |
| F29 | External input 1 setting | 0 to 9 | 0 | Sets the functions of input terminal of the programmable I/O. | - |
| F30 | External input 2 setting | | | | |
| F31 | External input 3 setting | | | | |
| F32 | External input 4 setting | | | | |
| F33 | No function | OFF (fixed) | OFF | No functions are provided. | - |
| F34 | | | | | |
| F35 | | | | | |
| F36 | | | | | |
| F37 | | | | | |
| F38 | Arc voltage direct detection switching | OFF/ON | OFF | Sets the voltage direct detecting terminal on the base metal side of the welding power source and voltage detection terminal of the wire feeder.<br>OFF: ineffective<br>ON: effective | - |
| F39 | Current display adjustment (GAIN) | -20 to 20 | 0 (%) | Adjusts the current values displayed on the digital meter. | - |
| F40 | Current display adjustment (OFFSET) | -20 to 20 | 0 (A) | | |
| F41 | Voltage display adjustment (GAIN) | -20 to 20 | 0 (%) | Adjusts the voltage values displayed on the digital meter. | - |
| F42 | Voltage display adjustment (OFFSET) | -2.0 to 2.0 | 0.0 (V) | | |
| F43 | CAN ID | 1 to 16 | 1 | Sets CAN ID numbers to be used in the PC monitoring system, etc. | - |
| F44 | Reading welding conditions with remote control | OFF/ON | OFF | Sets whether to read "1" to "10" of the welding conditions stored on the memory via the analog remote control:<br>OFF: Not to read<br>ON: Reads | - |
| F45 | Special crater sequence | OFF/ON | OFF | Sets the initial condition and crater condition as applied for a fixed period of time regardless of the torch switch operation:<br>OFF: Not applied<br>ON: Applied (Time set by F46 and F47 is applied) | ○ |
| F46 | Special crater sequence initial time | 0.0 to 10.0 | 0.0 (s) | Sets initial time in the special crater sequence. (available when "ON" is selected in F45) | ○ |
| F47 | Special crater sequence crater time | 0.0 to 10.0 | 0.0 (s) | Sets crater time in the special crater sequence. (available when F45 is enabled) | ○ |

| No. | Function Name | Setting range | Initial value | Explanation | Memory |
|---|---|---|---|---|---|
| F48 | Adjusting current with torch switch | OFF/ON | OFF | With the setting of "Crater" and in the welding condition (during start input holding), sets whether to adjust current by the torch switch operation:<br>OFF: not to use torch switch<br>ON: uses torch switch (increase/decrease volume set by F49 and F50 are applied). | ○ |
| F49 | Current increase and decrease by single-clicking | -100 to 100 | 0 (A) | Sets current increase/decrease volume by single clicking of the torch switch. (available when "ON" is selected in F48) | ○ |
| F50 | Current increase and decrease by double-clicking | -100 to 100 | 0 (A) | Sets current increase/decrease volume by double clicking of the torch switch. (available when "ON" is selected in F48) | ○ |
| F51 | Special crater repeat | OFF/ON | OFF | With the setting of "Crater," sets whether to switch the welding condition and crater condition by the click operation of the torch switch:<br>OFF: not to use torch switch<br>ON: uses the torch switch | ○ |
| F52 | Data type of data log function | 0 to 8 | 0 | Sets sample data on the data log:<br>0: No sampling<br>1: Welding current / Welding voltage / Sequence information<br>2: Current command / Voltage command / Feeding command<br>3: Current command / Welding current / Welding voltage<br>4: Current command / Welding current / Sequence information<br>5: Welding current / Voltage command / Welding voltage<br>6: Voltage command / Welding voltage / Sequence information<br>7: Welding current / Feeding command / Sequence information<br>8: Welding voltage / Feeding command / Sequence information | - |
| F53 | Sampling speed of data log function | 1/2/3 | 2 | Sets sampling interval of the data log function:<br>1: 10 ms<br>2: 100 ms<br>3: 1 s | - |
| F54 | Tack start process | OFF/ON | OFF | Sets whether to feed the wire with the slowdown speed at the time of welding start:<br>OFF: Feeds with slow down speed<br>ON: Feeds without slow down speed | - |
| F55 | Arc loss detection time | OFF (fixed) | OFF | Used when connecting with Gedik Welding automaticmachine. | - |
| F56 | Arc start error detection time | | | | |
| F57 | WCR output ON delay time | | | | |
| F58 | WCR output OFF delay time | | | | |
| F59 | Analog setting switch | | | | |
| F60 | Pulse peak current fine adjustment | -150 to 150 | 0 (A) | Sets the adjustment value of pulse peak current in pulse welding. | ○ |
| F61 | Pulse peak time fine adjustment | -1.5 to 1.5 | 0.0 (ms) | Sets the adjustment value of pulse peak time in pulse welding. | ○ |
| F62 | Base current fine adjustment | -60 to 60 | 0 (A) | Sets the adjustment value of base current in pulse welding. | ○ |
| F63 | L pulse peak current fine adjustment | -150 to 150 | 0 (A) | Sets the adjustment value of pulse peak current at the LOW side in pulse welding. | ○ |

| No. | Function Name | Setting range | Initial value | Explanation | Memory |
|---|---|---|---|---|---|
| F64 | L pulse peak time fine adjustment | -1.5 to 1.5 | 0.0 (ms) | Sets the adjustment value of pulse peak time at the LOW side in pulse welding. | ○ |
| F65 | L-base current fine adjustment | -60 to 60 | 0 (A) | Sets the adjustment value of base current at the LOW side in pulse welding. | ○ |
| F66 | Feeding amplitude ratio adjustment | 0 to 100 | 50 (%) | Sets the feeding amplitude ratio of wire feeder speed in wave pulse welding. | ○ |
| F67 | Setting change of current value (initial condition, crater condition) | OFF/ON | OFF | When “CRATER ON” is selected, sets the current value of the initial condition and crater condition in the percentage based on the current value of the welding condition.<br>OFF: invalid<br>ON: settable with percentage | - |
| F68 | Setting of current value (initial condition) | 10 to 300 | 100 (%) | Sets the current value of the initial condition in the percentage based on the current value of the welding condition. | - |
| F69 | Setting of current value (crater condition) | 10 to 300 | 100 (%) | Sets the current value of the crater condition in the percentage based on the current value of the welding condition. | - |
| F77 | Welding power source identification numbers | 1 to 999 | 1 | Sets welding power source identification numbers of Welding result control function. | - |
| F81 | Setting to use torch switch in TIG mode | OFF/ON | OFF | When "DC TIG" welding is selected, ON/OFF of output is controlled by the torch switch. Crater sequence, gas control, welding management functions are also enabled.<br>OFF: Disabled<br>ON: Torch switch is enabled. | - |

# 6.2 Function on Operation Panel

This section explains the function of displays and keys arranged on the operation panel.

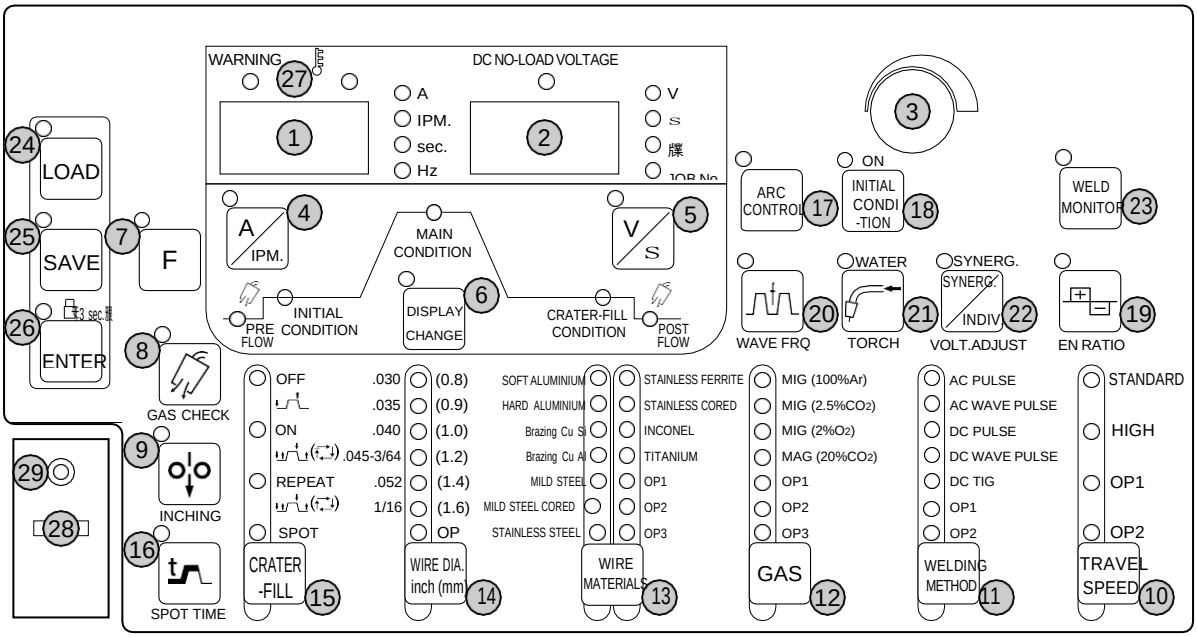


| No. | Name | Function |
|---|---|---|
| 1 | Left digital meter | Displays various information.<br>• The welding current is displayed in welding, and the LED of "A" lights up.<br>• In each setting, corresponding setting values are displayed, and the LED lit position automatically switches. |
| 2 | Right digital meter | Displays various information.<br>• The welding voltage is displayed in welding.<br>• In each setting, corresponding setting values are displayed, and the LED lit position automatically switches. |
| 3 | Parameter adjustment knob | Adjusts each parameter value such as welding current/voltage, and wire feed speed. |
| 4 | CURRENT SETTING DISPLAY SWITCH key | Sets welding current/wire feed speed. The value in setting is displayed on the left digital meter, which can be adjusted by the parameter adjustment knob. Switching the mode is enabled by pressing the key. |
| 5 | VOLTAGE SETTING DISPLAY SWITCH key | Set the welding voltage. The value in setting is displayed on the right digital meter, which can be adjusted by the parameter adjustment knob. When the SYNERGIC mode is selected for the adjustment mode of welding voltage, pressing this key can switch the value displayed on the right digital meter between "fine adjustment value" and "actual voltage value". (In the SYNERGIC mode, the welding voltage according to the welding current is regarded as ±0, based on which the welding voltage is finely adjusted.) |
| 6 | DISPLAY CHANGE SWITCH key | Switches the welding sequence as the set target. During the welding, the display can be switched to display the value set as the welding condition. |
| 7 | F (function) key | Sets the internal function of welding power source. (☞ 6.7 Setting Internal Functions)<br>Pressing this key for a second or more lights up the LED, and the sequence transits to the Internal Function Setting mode. |
| 8 | GAS CHECK key | Discharges the shield gas. (☞ 5.3 Power ON and Gas Supply)<br>Pressing this key makes the LED lit, allowing the shield gas to be discharged.<br>After discharging the gas for approximately 2 minutes automatically stops the discharge.<br>Pressing this key again lights off the LED, stopping the shield gas discharge. |
| 9 | INCHING key | Feeds the wire. (☞ 5.4 Wire Inching)<br>The LED lights during when the key is pressing, allowing the wire to be fed.<br>The feeding speed can be adjusted by the parameter adjustment knob.<br>When the analog remote control (optional) is connected, the speed can be adjusted by the welding current setting knob. |

| No. | Name | Function |
|---|---|---|
| 10 | TRAVEL SPEED key | Select the TRAVEL SPEED to apply. (*1)<br>• The LED of the parameter in selection lights up.<br>• Some option is invalid depending on the combination of the wire diameter, wire material, gas and the welding method. Selecting such invalid option makes the LED flash. (☞ 6.6.1 Welding mode setting) |
| 11 | WELDING METHOD key | Select the type of welding method. (*1)<br>• The LED of the parameter in selection lights up.<br>• Some welding method is invalid depending on the combination of the wire diameter, wire material, TRAVEL SPEED, and gas. Selecting such invalid option makes the LED flash. (☞ 6.6.1 Welding mode setting) |
| 12 | GAS key | Select the gas to use. (*1)<br>• The LED of the parameter in selection lights up.<br>• Some gas cannot be used depending on the combination of the wire diameter, wire material, TRAVEL SPEED and the welding method. When the gas which cannot be used is selected, the LED flashes. (☞ 6.6.1 Welding mode setting) |
| 13 | WIRE MATERIALS key | Select the wire material to use. (*1)<br>• The LED of the parameter in selection lights up.<br>• Some wire material cannot be used depending on the combination of the gas, wire diameter, TRAVEL SPEED, gas and the welding method. When the wire material which cannot be used is selected, the LED flashes. (☞ 6.6.1 Welding mode setting) |
| 14 | WIRE DIA. [in. (mm)] key | Select the wire diameter to use. (*1)<br>• The LED of the parameter in selection lights up.<br>• Some wire diameter cannot be used depending on the combination of the gas, wire diameter, TRAVEL SPEED, and the welding method. When the wire diameter which cannot be used is selected, the LED flashes. (☞ 6.6.1 Welding mode setting) |
| 15 | CRATER-FILL key | Select the crater treatment method or arc spot at the end of welding.<br>The LED of the parameter in selection lights up.<br>• For details of the crater treatment (☞ 6.6.3 Crater setting)<br>• For details of arc spot (☞ 6.6.4 Arc spot time) |
| 16 | SPOT TIME key | Sets the welding time when "ARC SPOT" is selected by the CRATER-FILL key. ( ☞ 6.6.4 Arc spot time)<br>Pressing this key makes the LED lit, enabling to adjust the welding time by the parameter adjustment knob.<br>The set time is displayed on the left digital meter. |
| 17 | ARC CONTROL key | Set the arc characteristics (soft to hard). (☞ 6.6.6 Arc characteristics adjustment)<br>Pressing this key makes the LED lit, enabling to adjust the arc characteristics by the parameter adjustment knob. The arc characteristic in adjustment is displayed on the right digital meter. |
| 18 | INITIAL CONDITION key | When "CRATER-FILL ON" is selected by the CRATER-FILL key, the sequence of initial condition is added before the welding. (☞ 6.6.3 Crater setting)<br>Pressing this key makes the LED lit, adding the sequence of initial condition. |
| 19 | EN ratio setting key | Adjust the EN ratio when you have selected the "AC pulse" or "AC wave pulse" by the WELDING METHOD key. (☞ 6.6.7 EN ratio)<br>Pressing this key turns ON the LED, enabling to adjust the EN ratio by the parameter adjustment knob.<br>The EN ratio is displayed on the right digital meter. |
| 20 | WAVE FRQ key | Sets the wave frequency when "DC WAVE PULSE" is selected by the WELDING METHOD key. (☞ 6.6.8 Adjustment of wave frequency)<br>Pressing this key lights the LED, enabling to adjust the wave frequency by the parameter adjustment knob.<br>The set wave frequency is displayed on the left digital meter. |

| No. | Name | Function |
|---|---|---|
| 21 | TORCH key | Select air-cooled welding torch or water-cooled welding torch to be used. Switching the mode is enabled by pressing the key.<br>• When the LED is ON: water-cooled welding torch mode (*1)<br>• When the LED is OFF: air-cooled welding torch mode |
| 22 | VOLT.ADJUST key | Sets welding voltage. Switching the mode is enabled by pressing the key.<br>• When the LED of the VOLT. ADJUST key is on: SYNERGIC mode. (The welding voltage is automatically set according to the set welding current. To fine -tune welding voltage, adjust the synergic fine adjustment knob.)<br>• When the LED of the VOLT. ADJUST key is off: INDIVIDUAL mode. (In the individual adjustment setting, welding current and welding voltage are adjusted respectively.) |
| 23 | WELD MONITOR key | Sets welding control function. (See Chapter 7 Administrator Functions.)<br>Pressing this key for a second or more lights up the LED, and the sequence transits to the welding control mode. |
| 24 | LOAD key | Read s the registered welding condition from the internal memory. (☞ 6.5 Memory Function of Welding Conditions) |
| 25 | SAVE key | Registers the set welding condition in the internal memory. (☞ 6.5 Memory Function of Welding Conditions) |
| 26 | ENTER key | Carries out the administrative functions such as key lock, password, and registration of welding condition to the memory.<br>Depressing the key for three seconds or more makes the LED lit, enabling the key lock function. |
| 27 | WARNING/Temperature LED | Lights up or flashes when any failure or abnormal condition occurs in the welding power source. (☞ 9.1 Action in Case of Error) |
| 28 | USB connector | For variety of registered data, writes to or reads from the USB memory. (☞ Chapter 7 Administrator Functions) |
| 29 | Terminals for service use | Terminals for the Gedik Welding service use. |

*1: Selective options can be optionally available (OP).

# 6.3 Welding Conditions

This section explains basic welding conditions with useful functions.

## 6.3.1 Basic welding conditions

This section explains the basic welding conditions. To carry out the welding operation, the followings should be considered:

- Plate thickness and materials of welding material
- Type and flow rate of shield gas
- Wire type and wire diameter, and welding method (type of welding)
- Welding current and welding voltage

## 6.3.2 Useful functions

This section explains the useful functions for the welding power source.

- Registration of welding conditions (☞ 6.5 Memory Function of Welding Conditions)
  Using the memory function of the welding condition enables to register the welding current /voltage, shield gas type, and wire type /wire diameter currently set, and reads them out for use.

- Synergic adjustment of voltage (☞ 6.2 Function on Operation Panel)
  Using the VOLT.ADJUST key enables to automatically set the welding voltage according to the welding current. Fine adjustment of the welding voltage automatically set is also available.
- Welding current adjustment by torch switch (☞ 6.7 Setting Internal Functions)
  Using the internal function (F48) enables to increase or decrease the welding current set by the torch switch operation. (Available only with the CRATER-FILL ON is selected and with welding condition)

# 6.4 Preparing Welding Conditions

This section explains the setting process of basic welding conditions.

| | |
|---|---|
| Check welding material suitable for the welding condition | (☞ 10.3 Materials for Setting Welding Conditions) |
| ↓ | |
| Setting wire material, shield gas, and TRAVEL SPEED | (☞ 6.6.1 Welding mode setting) |
| ↓ | |
| Setting wire diameter | (☞ 6.6.1 Welding mode setting) |
| ↓ | |
| Setting crater treatment | (☞ 6.6.3 Crater setting ) |
| ↓ | |
| Setting pre-flow (Setting gas discharge time) | (☞ 6.6.2 Setting welding parameter) |
| ↓ | |
| Setting initial condition (Setting welding current/voltage) | (☞ 6.6.2 Setting welding parameter) |
| ↓ | |
| Setting welding condition (Setting welding current/voltage) | (☞ 6.6.2 Setting welding parameter) |
| ↓ | |
| Setting crater condition (Setting welding current/voltage) | (☞ 6.6.2 Setting welding parameter, 6.6.3 Crater setting) |
| ↓ | |
| Setting post-flow (Setting gas discharge time) | (☞ 6.6.2 Setting welding parameter) |
| ↓ | |
| Registering the welding conditions set above as necessary | (☞ 6.5 Memory Function of Welding Conditions) |

# 6.5 Memory Function of Welding Conditions

This section explains the memory function of welding conditions.
The welding power source is equipped with the function to register the welding conditions and reads them out for use. The number of welding conditions that are able to be registered are 100 at maximum. Single welding condition can contain the following information at registration:

- Welding mode selected by the keys on operation panel (Shield gas /Wire /Crater /Penetration control, etc.)
- Welding current/voltage for each welding sequence (☞6.6.2 Setting welding parameter)
- Part of internal function (☞ 6.1.3 Internal function)

### ⚠ CAUTION

- The welding conditions (electronic data) stored by this function are susceptible to occurrence of static electricity, impact, repair, etc., and there is a possibility that the stored contents may be changed or lost. BE SURE TO MAKE A COPY FOR IMPORTANT DATA.
- Please note that Gedik Welding will not be liable for any alteration or loss of electronicinformation.

### NOTE

- When the analog remote control is connected to the machine, even if the stored welding condition is read, the set values of the analog remote control apply to the welding current and welding voltage of welding condition.

### TIPS

- Use of the internal function (F44) enables to read out the registered welding condition by the analog remote control (optional). (☞ 6.7 Setting Internal Functions)
- Use of the internal function (F11) enables to finely adjust the current/voltage values read out from the memory by the analog remote control (optional). (☞ 6.7 Setting Internal Functions)

## 6.5.1 Memory registration of welding conditions

This section explains how to register the current welding condition set on the operation panel to the memory.

STEP

1. **Press the SAVE key.**

   * The system transits to the storage function mode and the LED of the SAVE key lights up.
   * The JOB No. (registration No.) is displayed on the right digital meter in a flashing mode, and the LED of JOB No. lights up.
   * On the left digital meter, the setting value of the welding current registered to the JOB No. if any is displayed (if there is no registration, "- - -" is displayed), and the "A" LED lights up.

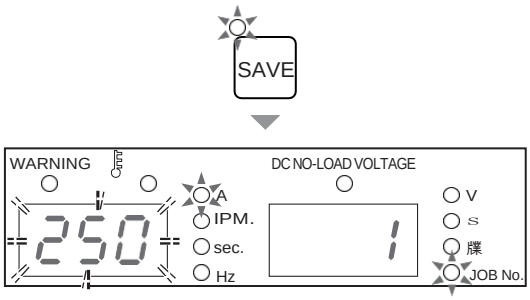


2. **Turn the parameter adjustment knob, and select the JOB No.**

   * When there is no registration data on the selected JOB No., "- - -" is displayed on the left digital meter.
   * When there is any registration data on the selected JOB No., the setting value of the welding current is displayed on the left digital meter. At this time, the LEDs for the keys of crater or wire material also light up.

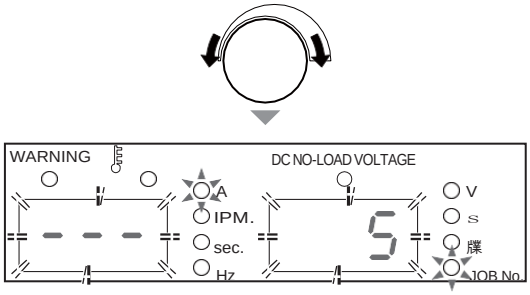

### 3. Press the ENTER key.

* The LED of ENTER key flashes.
* Pressing the DISPLAY CHANGE key enables to check the value of welding parameter registered in the JOB No. to overwrite. The setting values are displayed on the left /right digital meters in a flashing mode.
* To change the JOB No. to register, press the SAVE key. The display returns to the status described in step 1.
* To cancel the memory registration, press the LOAD key. The storage function mode is terminated.

### 4. Press the ENTER key.

* The welding condition is registered with the selected JOB No., and the storage function mode is terminated.
  The registered welding condition can be read out for use.

## 6.5.2 Read out of welding conditions

This section explains how to read out the welding conditions registered in the memory.

**TIPS**

- **The current welding condition set on the operation panel is overwritten by the welding conditions read out. To save the current welding condition, ensure to register it to the memory.**

**STEP**

### 1. Press the LOAD key.

* The system turns to the load mode, and the LED of the LOAD key lights up.
* The JOB No. (registration No.) is displayed on the right digital meter in a flashing mode, and the LED of JOB No. lights up.
* On the left digital meter, the setting value of the welding current registered to the JOB No. if any is displayed (if there is no registration, "- - -" is displayed), and the "A" LED lights up.

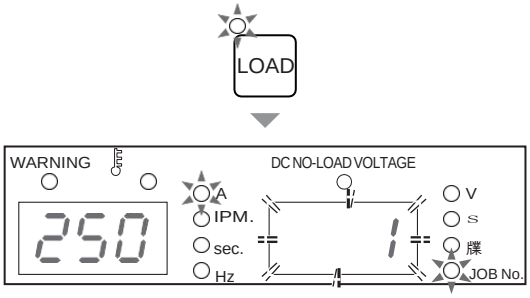


### 2. Turn the parameter adjustment knob and select the JOB No. to read out.

* When there is no registration data on the selected JOB No., "- - -" is displayed on the left digital meter.
* When there is any registration data on the selected JOB No., the setting value of the welding current is displayed on the left digital meter. At this time, the LEDs for the keys of crater or wire material also light up.

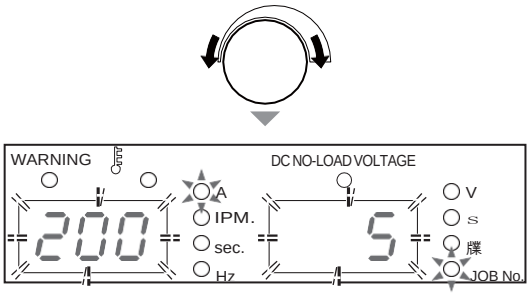

3. **Press the ENTER key.**

* The LED of ENTER key flashes.
* Pressing the DISPLAY CHANGE key enables to check the set values of welding conditions (welding parameters) to read out. The setting values are displayed on the left /right digital meters in a flashing mode.
* To change the JOB No. to read out, press the LOAD key. The display returns to the status described in step 1.
* To cancel the read out, press the SAVE key. The read mode is terminated.

4. **Press the ENTER key.**

* The welding condition is registered with the selected JOB No., and the read mode is terminated. The selected position on the operation panel and the current /voltage values are overwritten to those read out.

## 6.5.3 Deletion of memory registration

This section explains how to delete the welding conditions registered to the memory.

**NOTE**

- **The deleted data cannot be restored. Before deleting the stored welding condition, carefully check the welding JOB No. to delete.**

**STEP**

1. **Turn off the power switch.**
2. **With the LOAD key and the SAVE key depressed together, turn ON the power switch.**

● Depress these two keys until "dEL" is displayed on the left digital meter. Release the keys after "dEL" is displayed.

* "dEL" is displayed when the system transits to the DELETE mode.
* The JOB No. (registration No.) is displayed on the right digital meter in a flashing mode, and the LED of JOB No. lights up.

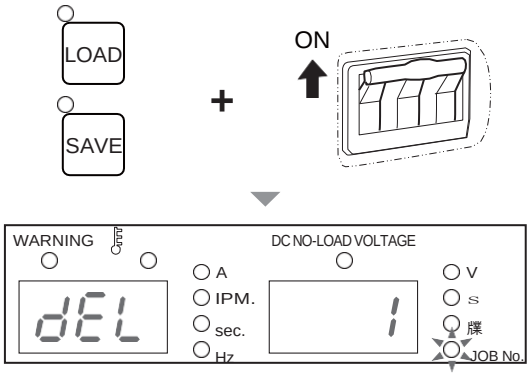

3. **Turn the parameter adjustment knob, and select the JOB No. to delete.**

- To delete all the registration at the same time, turn the parameter adjustment knob counterclockwise, to display "ALL" on the right digital meter.
  When "ALL" is selected, the current welding condition set on the operation panel is also deleted, and the welding parameters including the internal functions return to the initial values.

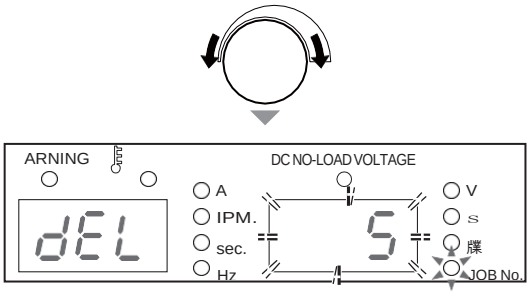


4. **Press the ENTER key.**

* The display "dEL" on the left digital meter starts flashing.
* Pressing the DISPLAY CHANGE key enables to check the value of welding parameter of the JOB No. to delete. The set values are displayed on the left / right digital meters in a flashing mode.
* To change the JOB No. to delete, press the LOAD key or the SAVE key. The display returns to the status described in step 2.
* To cancel the deletion, turn off the power switch. The delete mode is terminated.

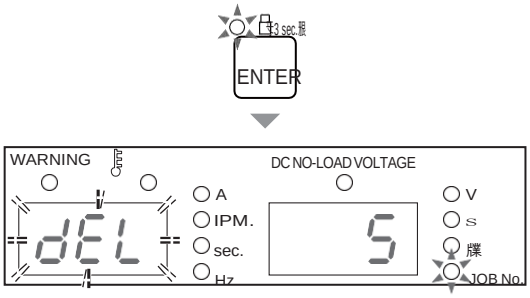


5. **Press the ENTER key.**

* The welding condition of the selected JOB No. is deleted, and "End" is displayed on the left /right digital meters.

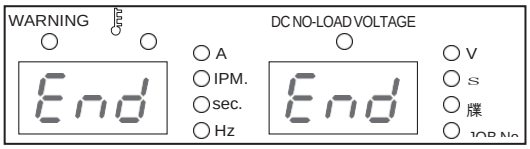


6. **Check that "End" is displayed on the left/right digital meters and turn off the power switch.**

* The power LED switch lights off. The status returns to normal when the power switch is turned on.

# 6.6 Setting Welding Conditions

This section explains how to set the welding conditions (welding mode or welding parameters).

## 6.6.1 Welding mode setting

Available combination of the welding mode is listed in the table below. Selecting unavailable combination displays “- - -“on the right /left digital meter in a flashing mode.

Standard specification

| WELDING METHOD | GAS (*1) | WIRE MATERIALS | WIRE DIA. [in. (mm)] | TRAVEL SPEED |
|---|---|---|---|---|
| AC PULSE | MIG(100%Ar) | SOFT ALUMINIUM | 3/64 / 1/16 (1.2 / 1.6) | (*2) |
| | | HARD ALUMINIUM | .040 / 3/64 / 1/16 (1.0 / 1.2 / 1.6) | (*2) |
| | | Brazing Cu Si | .035 / .045 (0.9 / 1.2) | (*2) |
| | | Brazing Cu Al | .035 / .045 (0.9 / 1.2) | (*2) |
| | | INCONEL | .045 (1.2) | (*2) |
| | MIG (2.5 % $CO_2$) (*1-1) | STAINLESS FERRITE | .030 / .035 / .040 /.045/ .052 / 1/16 (0.8/0.9/1.0/1.2/ 1.4/1.6) | (*2) |
| | MIG (2 % $O_2$) (*1-2) | STAINLESS STEEL | .035 / .040 / .045 (0.9 / 1.0 / 1.2) | (*2) |
| | MAG (20 % $CO_2$) (*1-3) | MILD STEEL | .035 / .040 / .045 (0.9 / 1.0 / 1.2) | (*2) |
| DC PULSE | MIG (100 % Ar) | SOFT ALUMINIUM | 3/64 / 1/16 (1.2 / 1.6) | (*2) |
| | | HARD ALUMINIUM | .040 / 3/64 / 1/16 (1.0 / 1.2 / 1.6) | (*2) |
| | | Brazing Cu Si | .035 / .045 (0.9 / 1.2) | (*2) |
| | | Brazing Cu Al | .035 / .045 (0.9 / 1.2) | (*2) |
| | | INCONEL | .045 (1.2) | (*2) |
| | MIG (2.5 % $CO_2$) (*1-1) | STAINLESS FERRITE | .035 / .040 / .045 (0.9 / 1.0 / 1.2) | (*2) |
| | MIG (2 % $O_2$) (*1-2) | STAINLESS STEEL | .035 / .040 / .045 (0.9 / 1.0 / 1.2) | (*2) |
| | MAG (20 % $CO_2$) (*1-3) | MILD STEEL | .035 / .040 / .045 (0.9 / 1.0 / 1.2) | (*2) |
| AC WAVE PULSE | MIG (100 % Ar) | SOFT ALUMINIUM | 3/64 / 1/16 (1.2 / 1.6) | (*2) |
| | | HARD ALUMINIUM | .040 / . 3/64 / 1/16 (1.0 / 1.2 / 1.6) | (*2) |
| | MIG (2.5 % $CO_2$) (*1-1) | STAINLESS FERRITE | .035 / .040 / .045 (0.9 / 1.0 / 1.2) | (*2) |
| | MIG (2 % $O_2$) (*1-2) | STAINLESS STEEL | .035 / .040 / .045 (0.9 / 1.0 / 1.2) | (*2) |
| | MAG (20 % $CO_2$) (*1-3) | MILD STEEL | .035 / .040 / .045 (0.9 / 1.0 / 1.2) | (*2) |
| DC WAVE PULSE | MIG (100 % Ar) | SOFT ALUMINIUM | 3/64 / 1/16 (1.2 / 1.6) | (*2) |
| | | HARD ALUMINIUM | .040 / 3/64 / 1/16 (1.0 / 1.2 / 1.6) | (*2) |
| | MIG (2.5 % $CO_2$) (*1-1) | STAINLESS FERRITE | .035 / .040 / .045 (0.9 / 1.0 / 1.2) | (*2) |
| | MIG (2 % $O_2$) (*1-2) | STAINLESS STEEL | .035 / .040 / .045 (0.9 / 1.0 / 1.2) | (*2) |
| | MAG (20 % $CO_2$) (*1-3) | MILD STEEL | .035 / .040 / .045 (0.9 / 1.0 / 1.2) | (*2) |

*1: Note that the "collective" voltage adjustment may not meet the appropriate condition if a mixing gas other than those with the following mixing ratios is used.

*1-1: MIG gas (mild steel): Argon (Ar) 97.5 % + Oxygen ($O_2$) 2.5 %

*1-2: MIG gas (stainless steel): Argon (Ar) 98 % + Oxygen ($O_2$) 2 %

*1-3: MAG gas: Argon (Ar) 80 % + Carbon dioxide ($CO_2$) 20 %

*2: Available for applications either of "STANDARD" or "HIGH".

<Relationship of wire diameter and welding current at aluminum welding (Reference)>

| Aluminum material | Wire diameter [in. (mm) Φ] | Welding method | Range of stable welding power source (A) |
|---|---|---|---|
| HARD ALUMINUM (A5183, A5336 etc.) | .040 (1.0) | DC pulse/DC wave pulse | 50 to 150 |
| | | AC pulse/AC wave pulse | 40 to 150 |
| | .045 (1.2) | DC pulse/DC wave pulse | 50 to 250 |
| | | AC pulse/AC wave pulse | 40 to 200 |
| | 1/16 (1.6) | DC pulse/DC wave pulse | 75 to 350 |
| | | AC pulse/AC wave pulse | 60 to 300 |
| SOFT ALUMINUM (A4043 etc.) | .045 (1.2) | DC pulse/DC wave pulse | 60 to 300 |
| | | AC pulse/AC wave pulse | 50 to 250 |
| | 1/16 (1.6) | DC pulse/DC wave pulse | 75 to 350 |
| | | AC pulse/AC wave pulse | 60 to 250 |

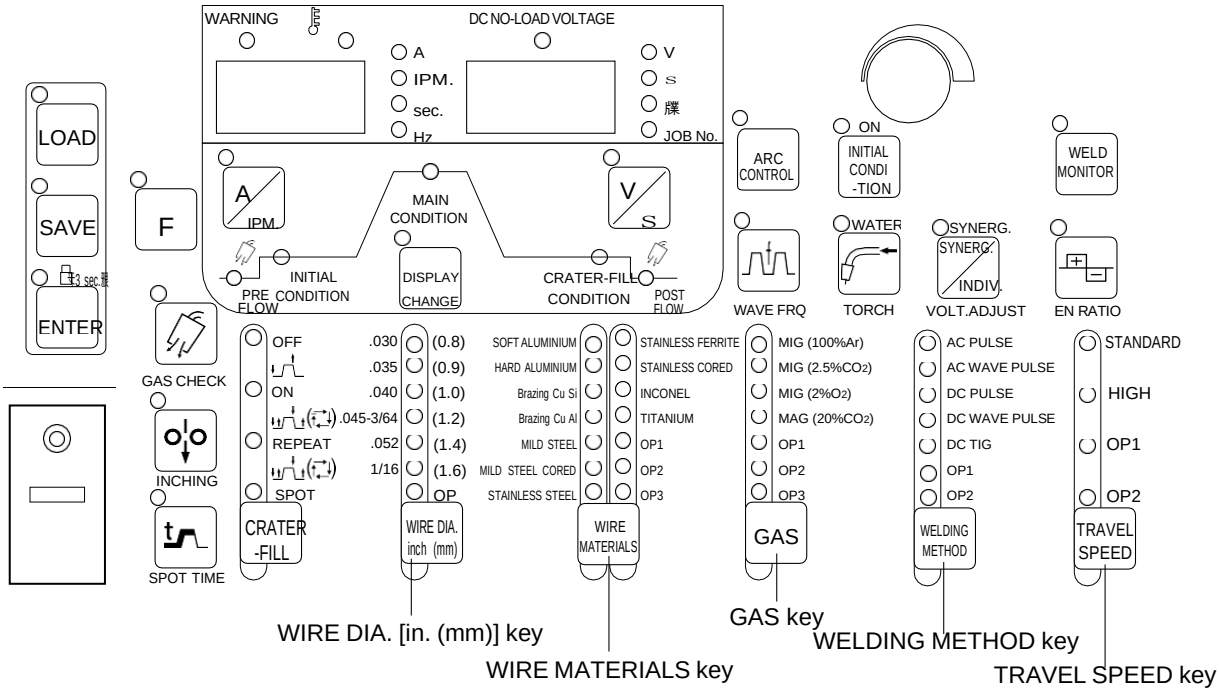


**STEP**

1. **Press the WELDING METHOD key, and select the welding method to apply.**
2. **Press the WIRE MATERIALS key, and select the wire material to apply.**
3. **Press the GAS key and select the shielding gas to apply.**
4. **Press the WIRE DIA. [in. (mm)] key and select the wire diameter to apply.**

## 6.6.2 Setting welding parameter

This section explains how to set the welding parameter (gas discharge time, welding current /voltage). The welding parameters are set according to the welding sequence.

### 6.6.2.1 Welding sequence

The basic welding sequence is the process of PRE-FLOW, MAIN CONDITION, and POST FLOW. To this sequence, initial condition and crater condition can be added depending on the crater setting. The welding parameters such as gas discharge time, welding current and voltage should be set to this sequence.

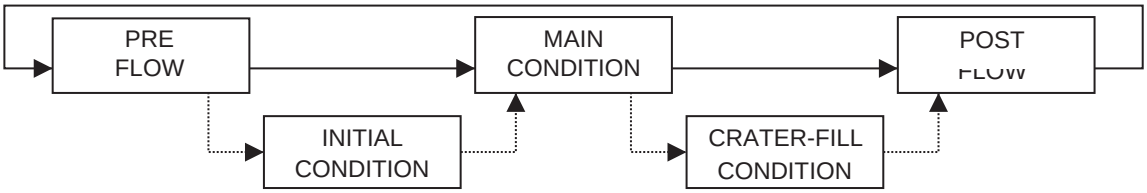


Each sequence process has the following description:

| Process | Description |
|---|---|
| PRE-FLOW | It is the sequence to discharge gas before the welding starts. |
| INITIAL CONDITION | The welding is carried out in this sequence during when the torch switch is ON. |
| MAIN CONDITION | It is the welding sequence. |
| CRATER -FILL CONDITION | It is the sequence processing the crater part. |
| POST FLOW | It is the sequence to discharge gas after the welding completes. |

### 6.6.2.2 Welding parameter setting

This section explains how to set the welding parameters (gas discharge time, welding current / voltage) according to the welding sequence.

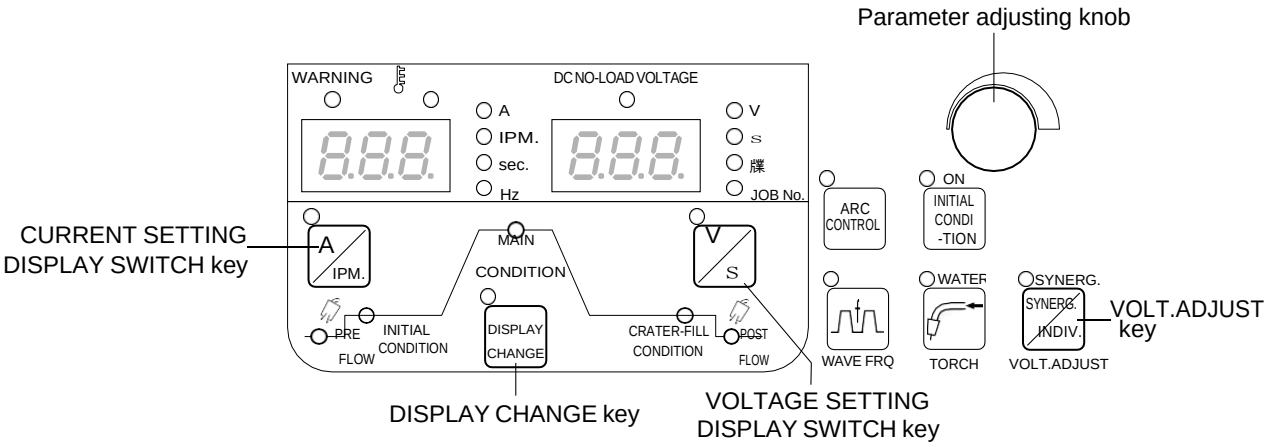


STEP

1. **Set the gas discharge time.**

- Press the DISPLAY CHANGE key and select the LED of "PRE FLOW" (or "POST FLOW").
- Turn the parameter adjustment knob to set the gas discharge time.
  The set parameter is displayed on the left digital meter.

2. **Set the welding current.**

- Press the DISPLAY CHANGE key and select the LED of "MAIN CONDITION" (or "INITIAL CONDITION" or "CRATER-FILL CONDITION").
- Check the lighting on the LED "A" (unit of welding current). When the LED is lights off, press the "CURRENT SETTING DISPLAY SWITCH" key to light up the LED.
  (The welding current can be also set based on the wire feed speed. In this case, refer to "6.7.2.18 F24: Wire feeding speed setting")
- Turn the parameter adjustment knob to set the welding current.
  The set parameter is displayed on the left digital meter.

**TIPS**

- **In the setting of welding current, the wire feed speed automatically set according to the welding current can be checked. Press the "CURRENT SETTING DISPLAY SWITCH" key to light off the LED of the key ["IPM (m/min)": On, "A": Off], and the value displayed on the left digital meter switches to the display of wire feed speed. Pressing the "CURRENT SETTING DISPLAY SWITCH" key again to light on the LED of the key ["IPM (m/min)": Off] returns the display to the one of welding current.**

3. **Set the welding voltage.**

- Check the lighting on the LED "V" (unit of welding voltage). When the LED is lights off, press the "VOLTAGE SETTING DISPLAY SWITCH" key to light up the LED.
- Turn the parameter adjustment knob to set the welding voltage.
  The set value is displayed on the right digital meter.
  At SYNERGIC mode: fine adjustment is carried out based on the welding voltage automatically set according to the welding current.
  At INDIVIDUAL mode: voltage setting is made in regardless of the welding current.
  Switch the mode by the "VOLT. ADJUST" key. (☞ 6.6.5 Welding voltage adjustment)
  The mode set by the "VOLT. ADJUST" key is applied all of the conditions (INITIAL CONDITION / MAIN CONDITION /CRATER-FILL CONDITION).

4. **Register to the memory as necessary. (☞ 6.5 Memory Function of Welding Conditions)**

## 6.6.3 Crater setting

This section explains the details of crater treatment and torch switch operation.

There are modes listed below for the crater setting. For initialization conditions, select availability by the INITIAL CONDITION key.

| Mode | Initial condition | Description |
|---|---|---|
| CRATER-FILL OFF | - | In the welding process, only available process is the main welding. (☞ 6.6.3.1 Crater "OFF") |
| CRATER-FILL ON | Unavailable | After the main welding, the welding process on the "Crater" condition is available. (☞ 6.6.3.2 Crater "ON" (no initial condition)) |
| | Available | Adding to the above, the welding process is available by the initial condition before the main welding. (☞ 6.6.3.3 Crater "ON" (with initial condition)) |
| CRATER-FILL ON (REPEATED) | Unavailable | After the main welding, the welding process on the "Crater" condition (REPEATED) is available. (☞ 6.6.3.2 Crater "ON" (no initial condition)) |
| | Available | Adding to the above, the welding process is available by the initial condition before the main welding. (☞ 6.6.3.3 Crater "ON" (with initial condition)) |
| Arc Spot | - | The welding process by the arc spot is available. (☞ 6.6.4 Arc spot time) |

The above-mentioned mode switches in the following order by each pressing the CRATER-FILL key. "CRATER FILL OFF" - "CRATER FILL ON" - "CRATER FILL ON (REPEATED)" - "Arc Spot".

### 6.6.3.1 Crater "OFF"

Select "CRATER OFF" by the CRATER-FILL key.

- In synchronous to the ON/OFF operation of the torch switch, the welding starts/stops.

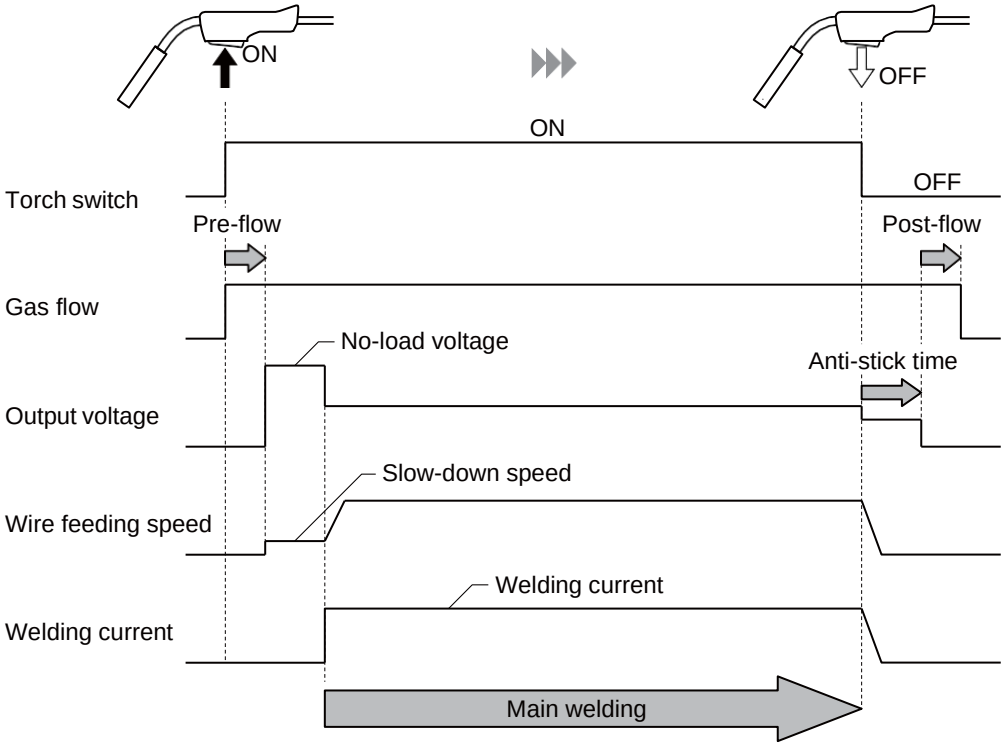

### 6.6.3.2 Crater "ON" (no initial condition)

Select "CRATER-FILL ON" by the CRATER-FILL key to light off the LED of the INITIAL CONDITION key.

- Carry out twice the ON /OFF operation of the torch switch and carry out the welding operation. In the second ON operation, the welding sequence is carried out by the crater current.
- Even if the torch switch is switched off during welding, the signal will be self-hold. (The torch switch should remain depressed and held during the CRATER phrases.)

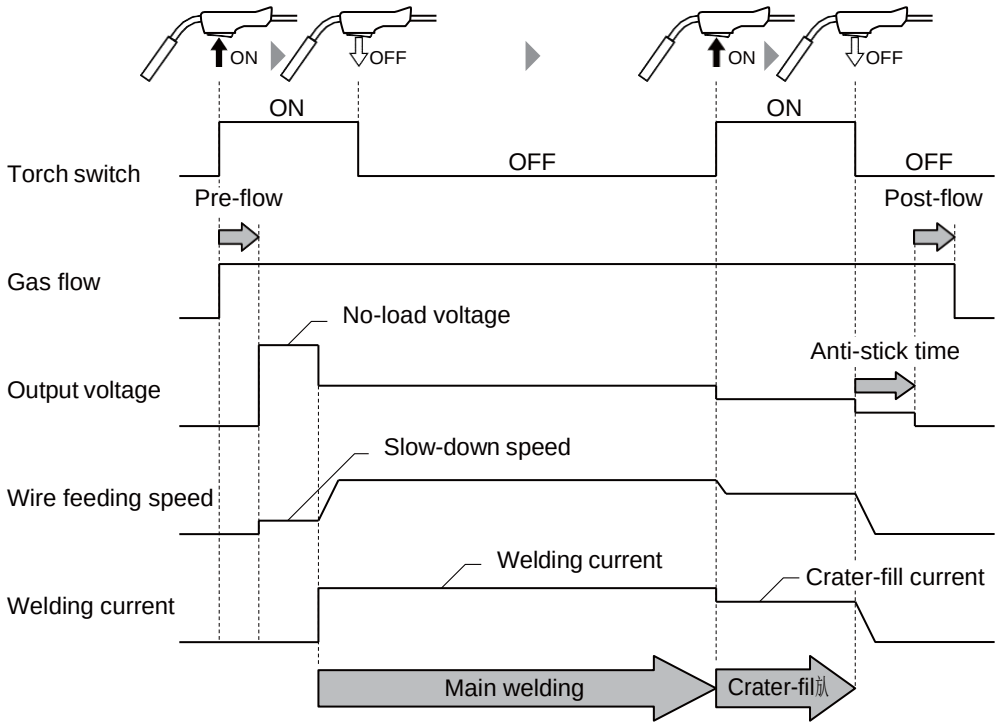

### 6.6.3.3 Crater "ON" (with initial condition)

Select "CRATER-FILL ON" by the CRATER-FILL key to light on the LED of the INITIAL CONDITION key.

- Carry out twice the ON /OFF operation of the torch switch and carry out the welding operation. The operation from the first ON to OFF enables the welding by the initial current, and the second ON operation enables the welding by the crater current.
- Even if the torch switch is switched off during welding, the signal will be self-hold. (The torch switch should remain depressed and held during the INITIAL and CRATER phrases.)
- Welding method in the initial condition is the same with the main welding.

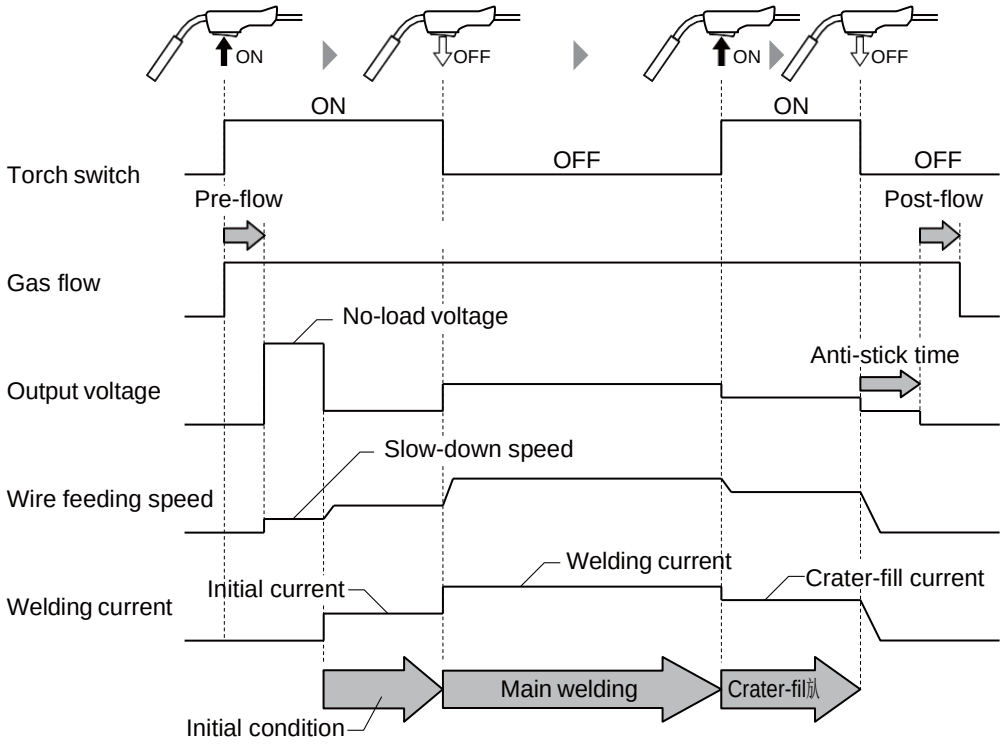

### 6.6.3.4 Crater (Repeated)

Select “CRATER-FILL ON (REPEATED)” by the CRATER SWITCH key.

- The torch switch operation until the crater treatment is the same with the welding of “CRATER-FILL ON”. (☞ 6.6.3.2 Crater "ON" (no initial condition))
- In the crater treatment, if the torch switch is turned on again within 2 seconds, the machine starts on the “Crater” condition and continues operation. Repeating this allows crater process to be carried out as many times as needed.

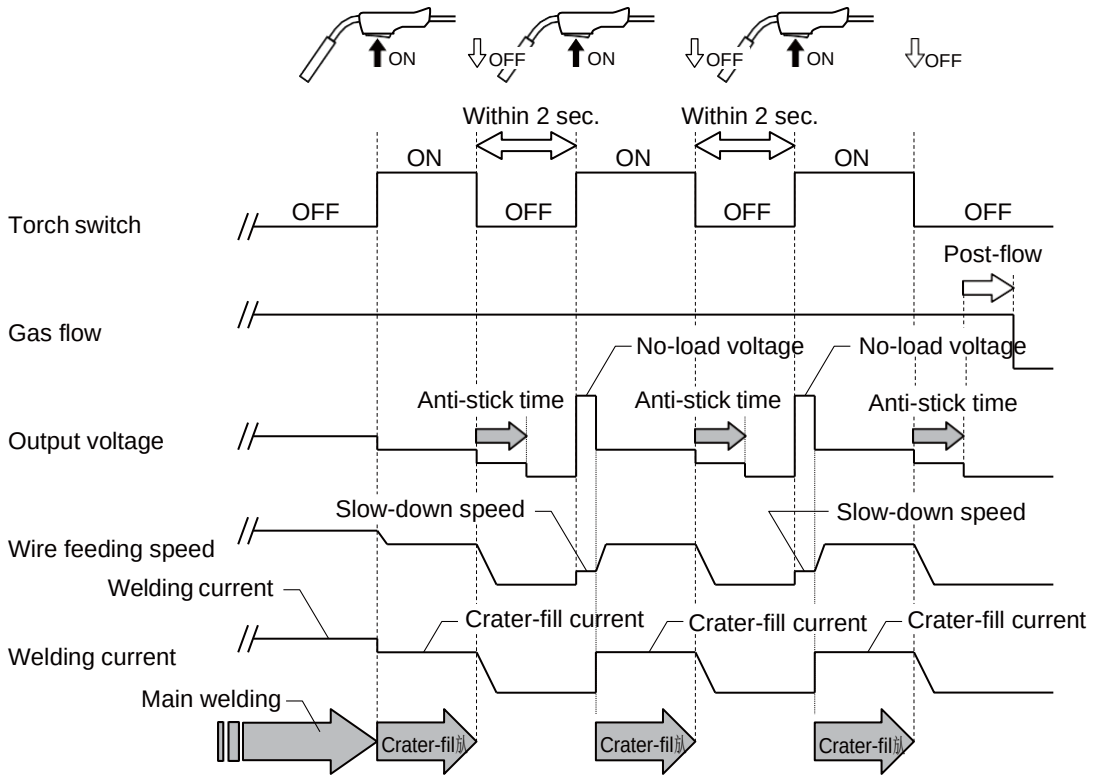

## 6.6.4 Arc spot time

This section explains the details of arc spot and torch switch operation.
Selecting "ARC SPOT" by the CRATER-FILL key allows the machine in the main mode.

- In this mode, the torch switch remains to be ON for welding operation. When the arc spot time elapses, the welding automatically stops.
- The arc spot time is displayed on the left digital meter when pressing the SPOT TIME key and is adjustable by the parameter adjustment knob.
- Turning OFF the torch switch before reaching the arc spot time starts the anti-stick treatment from then.

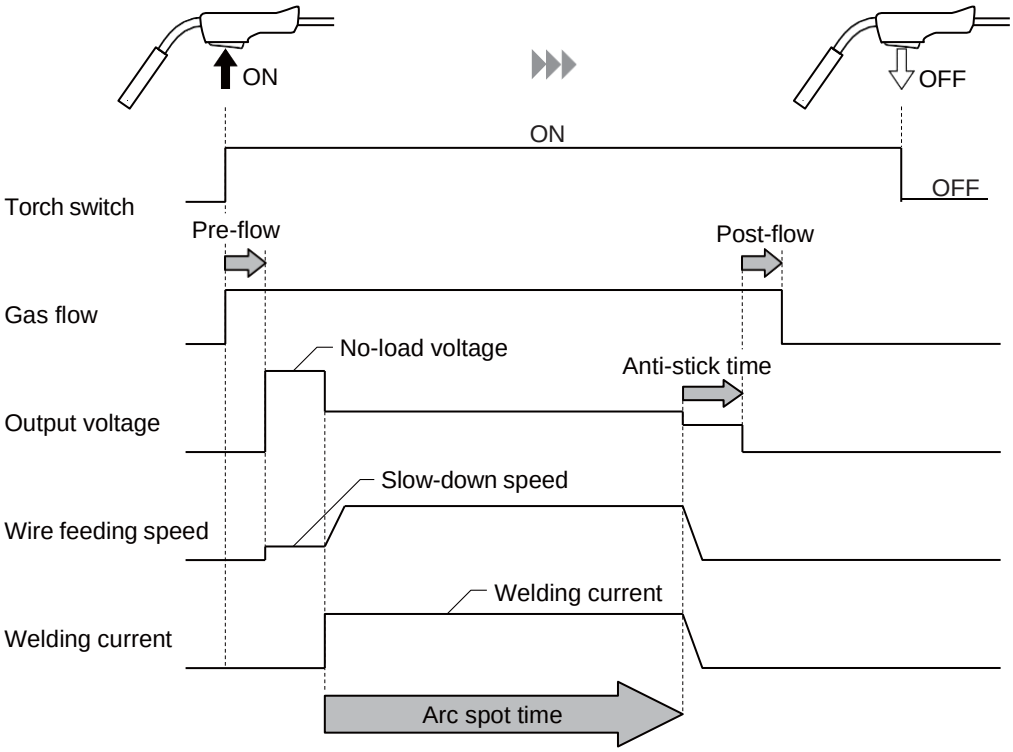


**TIPS**

- **In carrying out the arc spot welding, purchase the nozzle especially for arc spot (optionally available). For details on the nozzle for arc spot, see the instruction manual of the torch.**

## 6.6.5 Welding voltage adjustment

This section explains how to adjust the welding voltage. The adjustment of welding voltage can be carried out either by the SYNERGIC mode or INDIVIDUAL mode.

**TIPS**

- **Some conditions such as synergic condition does not meet the appropriate level if a mixing gas ratio of shield gas is not the specified value. (☞ 6.6.1 Welding mode setting)**
- **Even when the base material side/torch side cable or torch cable is extended, adjust to a higher voltage setting beforehand in consideration of voltage decrease.**
- **The voltage displayed during the setting or welding is the voltage of output terminal (base metal side) between the wire feeder and welding power supply.**

■ SYNERGIC mode

Press the VOLT.ADJUST key. When the LED of the key is ON, it means the SYNERGIC mode is applied.

- The welding voltage is automatically set to the values corresponding to the welding current.
- The voltage value automatically set can be finely adjusted by the parameter adjustment knob. (Welding voltage on the positive side: high, negative side: low.)

■ INDIVIDUAL mode

Press the VOLT.ADJUST key. When the LED of the key is OFF, it means the INDIVIDUAL mode is applied.

- Press the VOLT.ADJUST key. When the LED of the key is OFF, it means the INDIVIDUAL mode is applied.
- The welding voltage can be adjusted by the parameter adjustment knob.

## 6.6.6 Arc characteristics adjustment

This section explains the adjustment procedure of arc characteristics (arc status). Using this function enables to adjust the arc status into soft or hard condition.

Press the ARC CONTROL key. When the LED of the key is ON, it means the arc control is ON.
The setting value is displayed on the right digital meter, and can be adjusted by the parameter adjustment knob. (Positive value: soft arc condition, negative value: hard arc condition)

**TIPS**

- **It is likely that good weld can be obtained by adjusting it to "hard" in low current region and "soft" in high current region.**
- **When using an extended cable for the base material side /torch side or using an extended torch cable, it is likely that good welding can be performed by adjusting it to "hard."**

## 6.6.7 EN ratio

In the AC pulse welding, the EP current (the torch is + polarity) and the EN current (the torch is – polarity) output alternately, and the heat input to the base metal (penetration) can be controlled according to the EP and EN ratio. As a result, a high-quality welding can be obtained for very thin plate or the work which has gap.

For EN ratio setting, select “AC PULSE” or “AC WAVE PULSE” by WELDING METHOD selector key. When “DC pulse” is selected, EN ratio setting is invalid.
When pressing the EN ratio setting key while the INITIAL CONDITION, MAIN CONDITION, or CRATER-FILL CONDITION is selected the EN RATIO lamp (located at the upper left on the EN ratio setting key) lights up, the setting value is displayed in the right display, and the ? LED lamp lights up. At that condition, it is possible to set EN ratio by using the Parameter adjusting knob. The setting range is -50 to +50.
Pressing the EN ratio setting key again or pressing the DISPLAY CHANGE key returns to the previous parameter setting. In addition, it is also possible to change over the display to a current-related parameter by using the Current setting display selector key and to a voltage-related parameter by using the Voltage setting display selector key.
The average EN ratio (%) during welding is displayed in the left display.

The standard setting value of EN ratio is 0. As the setting value of the EN ratio is set in the negative direction, EN ratio becomes smaller (down to -50). As the setting value of the EN ratio is set in the positive direction, EN ratio becomes larger (up to +50).

The relation between EN ratio setting and welding result are shown in the table below.

| Negative direction | EN ratio setting | Positive direction |
|---|---|---|
| Decreasing | EN ratio | Increasing |
| Slow | Wire melting speed | Quick |
| Small | Gap tolerance | Large |

*: It is substantially constant penetration.

EN means the period which the base metal is positive (+) and the torch is negative (-), and EP means the period which the base metal is negative (-) and the torch is positive (+).

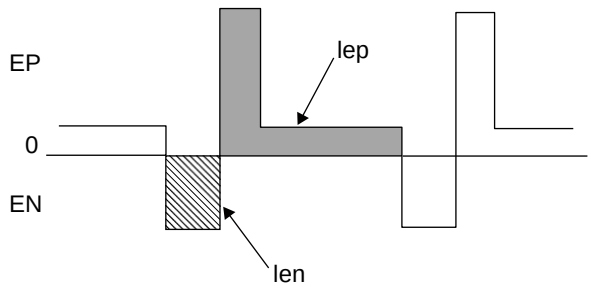


EN ratio means the current ratio of the EN polarities (ratio of the areas) at one AC cycle, and it was shown by percent.
It is defined by the next expression.

$$\text{EN ratio} = \frac{len}{lep + len} \times 100\%$$

The EN ratio changes about 1% by adjustment amount '1' of the operation. A standard value of the EN ratio (value at center position '0') and the maximum value and the minimum value of the EN ratio are different depending on the welding process and each current setting.

**TIPS**

- **The EN ratio is as a guide, and it may become different result according to an actual welding condition and the working environment.**

## 6.6.8 Adjustment of wave frequency

This section explains how to adjust the wave frequency. In wave pulse welding, cyclically accumulating two separate unit pulse conditions at low frequency enables to obtain continuous weld bead looking like rows of fish scales.

Aluminum welding makes a ripple bead using an overlap method.
It can also make welding easier, even if there is a gap between weld parts, because it performs a crystal miniaturization by vibrating the molten pool, and the welded part becomes more resistant to cracking.

The wave pulse welding changes the wire feeding speed and unit pulse condition.
When it close to the limiting value of response characteristics of wire feed motor, it makes the feeding amplitude small automatically.
When the wave frequency is 3 Hz or more, the amplitude of feeding speed becomes small. At 5 Hz or more, it disappears. In this case, the wire feeding speed becomes stable and only the unit pulse condition changes.

<Image of welding bead form in the wave frequency>

| Wave frequency | Image of welding bead form |
|---|---|
| Low | 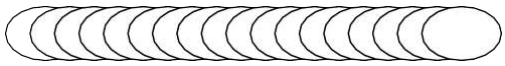 |
| High | 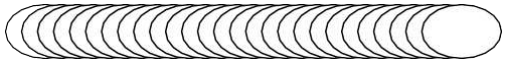 |

## TIPS

- This function is available when "DC WAVE PULSE" or "AC WAVE PULSE" is selected by the WELDING METHOD key.
- Wave pattern of the welding bead varies depending on the type of welding material, travel speed, and the heat input during welding.
  The welding materials such as a mild steel and SUS do not make wave patterns, because they spend much time to coagulate.
- The blowhole reduction effect is related to the molten material vibration.
  When the molten pool is large, the vibration becomes large and has a good effect, but if it is small, the vibration becomes small and has no effect.
  The amount of molten material is related to the bead size. When weld is performed using a thick bead, the effect becomes large.
- This effect is not for disappearing blowholes in all welding materials such as very thick metalizing plating, a steel product containing lots of oils, and cast metal.
- When using annealed wire, bead surface may blacken somewhat if shorting occurs frequently during the welding operation.

## STEP

### 1. Select the welding sequence to adjust.

● Press the DISPLAY CHANGE key, and select either "INITIAL CONDITION", "MAIN CONDITION" or "CRATER-FILL CONDITION".

* The LED for the selected welding sequence lights up.

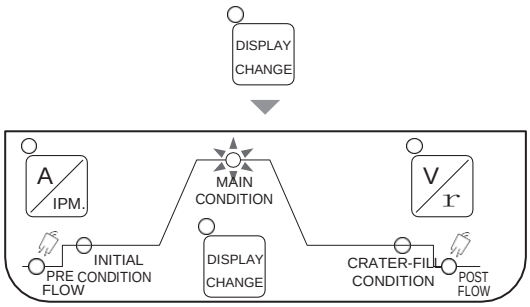


### 2. Press the WAVE FRQ key.

* The LED for the WAVE FRQ key lights up.

* The wave frequency setting value appears on the left digital meter.

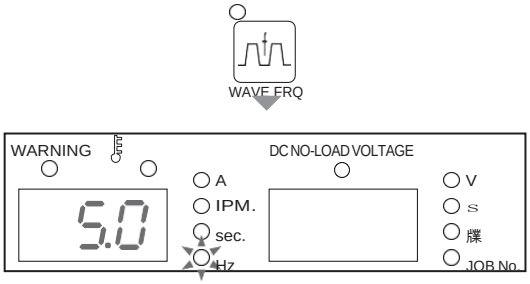

### 3. Turn the parameter adjustment knob, and change the setting value.

- Adjust the value between 0.5 to 32 Hz.

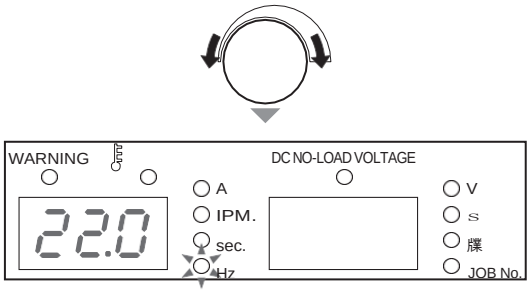


### 4. Press the WAVE FRQ key or the DISPLAY CHANGE key.

* Adjustment of wave frequency is complete.

# 6.7 Setting Internal Functions

This section explains how to set the internal functions with the details.
The internal functions can be customized according to the using environment of the customer for further convenient use of the welding power source.

## 6.7.1 Setting procedure

This section explains how to set the internal functions.
Details of internal function (☞ 6.7.2 Detailed information on internal functions)

**TIPS**

- **The internal function is activated at the point when the setting value is changed. To change the set values of internal functions, ensure that there is no mistake in the function No. as well as in the function setting.**

**STEP**

1. **Depress the F (Function) key for one second or more.**

   * The function No. is displayed on the left digital meter in a flashing mode.
   * The setting value of each function No. is displayed on the right digital meter.

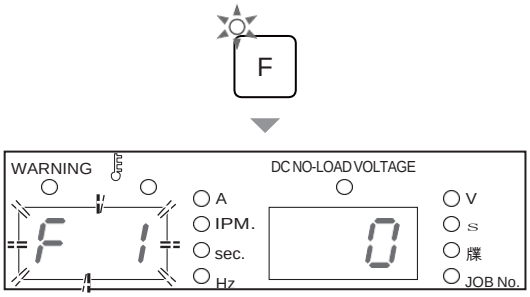


2. **Turn the parameter adjustment knob, to display the function No. to set.**

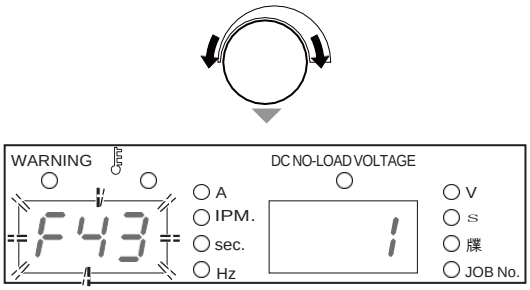


3. **Press the F (Function) key again.**

   * The display on the right digital meter changes to a flashing mode.

4. Turn the parameter adjustment knob, and change the setting value.

* The set value is activated as it is changed.
* Pressing the F (Function) key enables to return the display to the status described in step 1.

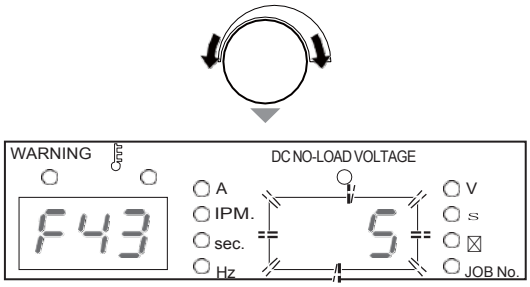


5. Depress the F (Function) key for one second or more.

* The setting of internal function completes, and the display returns to a normal state.

## 6.7.2 Detailed information on internal functions

This section explains the detailed information of internal functions in the order of function No.

### 6.7.2.1 F2: Switch of AC start

In the AC pulse welding, to obtain enough penetration at the welding start, DC welding is performed from the welding start for a certain period. This period is called "DC pulse start period" and it can be set with F2.
Factory setting is "30" (0.3 sec). Shorten the period in case of controlling the heat input and decreasing the penetration at the welding start. Lengthen the period in case of increasing the penetration.
Setting range is 0 to 200. The unit of time is 0.01 sec.
AC pulse is performed by setting "0".

### 6.7.2.2 F4: Auto/Semi-auto mode

In combining the welding power source with a robot or an automatic machine, set I /O (interface) of the welding source according to the application.
For the settings "0" to "2" and "5", refer to the table below.

| Parameter | Setting | | | |
|---|---|---|---|---|
| | 0 (Semi-automatic) | 1 (Automatic machine 1) | 2 (Automatic machine 2) | 5 (Automatic machine 3) (*6) |
| Cancellation of operation stop | After short-circuiting the pins [3] -[4] operation stop terminals on the external connection terminal block TM3, and turn the power on again. (*4) | Short-circuit the operation stop terminal pins [3]-[4] on the external connection terminal block TM3. (*4) | | |
| Stuck wire removal voltage (*1) | Voltage is not output. | Voltage is output for approx. 0.2 seconds after completion of anti-stick process. | | |
| Welding current/ voltage setting | Set by operation panel or remote control. | Set by external command voltage (*2) | Set by operation panel or remote control. | Welding current : Set by external command voltage (*2)<br>Welding voltage : Set by operation panel |

| Parameter | Setting | | | |
|---|---|---|---|---|
| | 0 (Semi-automatic) | 1 (Automatic machine 1) | 2 (Automatic machine 2) | 5 (Automatic machine 3) (*6) |
| Inching | Operation by operation panel or remote control. | Set on the operation panel or short-circuit the pins [5]-[6] of the analog remote control receptacle (CON2).<br> 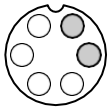 <br><Analog remote control receptacle> (*5)<br>The above figure shows the front view of analog remote control receptacle which is allocated on the front of welding power source. | | |
| Retract function (*3) | Disabled | Enabled | | |
| Error reset | After removing the cause of error, the power is restored. | After removing the cause of error, the power is restored.<br>Or open/short-circuit the deactivated terminal pins [3]-[4] of the external connection terminal block TM3. (*4) | | |

*1: In the "Auto" mode, voltage to release welding is output for approx. 0.2 seconds after the anti-stick process. This voltage is output even if the wire is not welded.

*2: If an external command voltage is input, it should be input to the terminal pins ([1]-[3], [1]-[4]) of the remote control receptacle as shown in the below figure.
Relationship between input and output is as the charts provided in "F5: Maximum external command voltage ". (☞ 6.7.2.3 F5: Maximum external command voltage)

Ensure that the command voltage is input at least 100 ms before the start signal is input.
Use the external power source with current capacity of 0.5 mA or more.

## ⚠ CAUTION

- Supply 0V to 15 V to E1 and E2.
  Exceeding 15 V may result in damage to the control circuit of the welding power source.

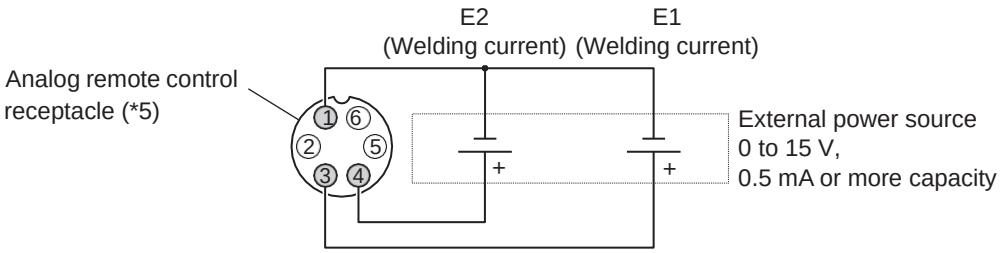


*3: In the "Auto" mode, "3" (Retract) can be allocated to the functions of external input terminals of F29 - F32.
For more information on the retract function, refer to (☞ 6.7.2.20 F29 to F32: External input terminal setting)

*4: For the details of external connection terminal block; (☞ 4.5.2 Connection of automatic machine )

*5: For the applicable plug of analog remote control receptacles: See specification DPC25-6A/Part No. 4730-009.

*6: If you want to use Automatic machine 3, conditions will change for the following functions.

- F5 (Maximum external command voltage) : Fixed to "10.0V"
- F24 (Wire feeding speed setting) : Fixed to "ON"
- E-800 and 801 (encoder error) of the Error code are invalid
- GAS CHECK key, INCHING key and TRAVEL SPEED key are invalid

### 6.7.2.3 F5: Maximum external command voltage

When the internal function F4 (Auto /Semi-auto mode) is used with the setting of "1", set the maximum value of command voltage input from outside.
Select either from 10 V, 14 V, or 15 V.

The below charts show the relationship between current / voltage command voltage and welding current / voltage.
(Use these charts as a rough indication. Welding current / voltage against the welding conditions setting voltage may differ from the indications on the charts depending on the external input (command voltage), wire length or routing of the cable at base material side / torch side, or wire feeding length difference.)

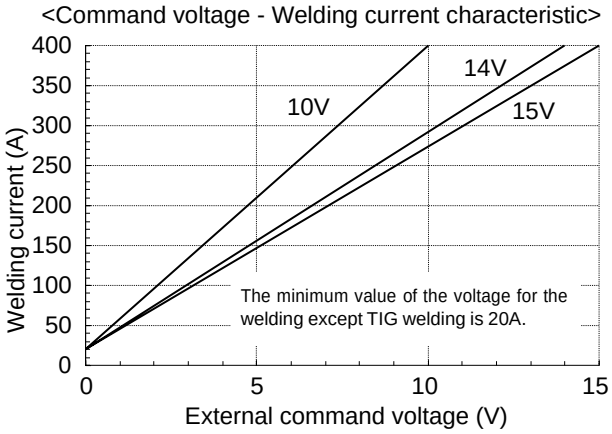


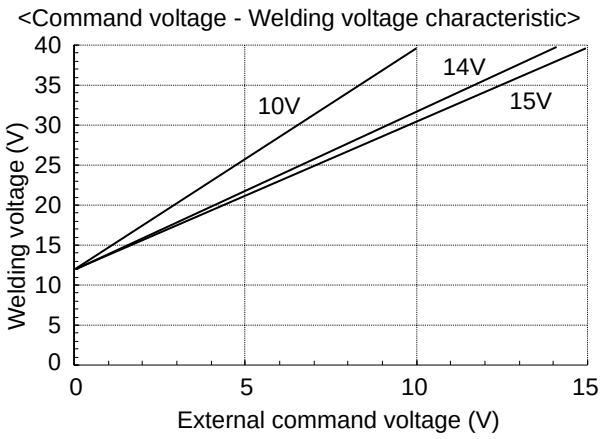


### 6.7.2.4 F6: Upslope time

When the difference between the initial current and welding current is large, the wire may burn up at the change of the conditions. In this case, adjust the time period changing from the initial current to the welding current (upslope time) longer.

- Setting range of upslope time: 0.0 to 10.0 [sec]

### 6.7.2.5 F7: Downslope time

When the difference between the welding current and crater current is large, the wire may plunge into weld pool at the change of the conditions (the wire is fed by inertia because the speed reduction is too late). In this case, adjust the time period changing from the welding current to the crater current (downslope time) longer.

- Setting range of downslope time: 0.0 to 10.0 [sec]

### 6.7.2.6 F8: Welding result display time

Set the time period for the output current and voltage to be displayed on the left/right digital meters in a flashing mode after the completion of welding. Set the display time in the flashing mode.
The value of display time is the average value for 1 second immediately before the completion of welding.

- Setting range of welding result display time: 0 to 60 [sec]

### 6.7.2.7 F9: Analog remote control scale

Change the setting of the scale plate of analog remote control when using the optional analog remote control.

| Rated output current of welding power source | Applicable scale and scale plate |
|---|---|
| 350 A | 350/200 |
| 500 A | 500/350/200 |

- Scale plate is available separately for 500 A, 350 A, and 200 A. According to the selected scale of analog remote control, replace the scale plate as necessary. (☞ 6.8 Operation of Analog Remote Control (Optional))
- When using the remote control in a low current region, set the scale plate to 200A.

### 6.7.2.8 F10: Motor overcurrent detection level

Set the over current detection level for the current flowing to the wire feed motor.
If contact resistance of the wire feeding line section increases due to liner wear / tip defect, etc., motor current increases (when the feeding roller does not slip). Monitoring this motor current enables to identify faults of the feeding line.

Set the detection level in the range of 20 to 150 % of the motor rated current.

- The factory default setting is 70 % of 2.8 A (continuous).
  If the current flows to the motor exceed the set value, the alarm display of “E-820” is displayed; output of the welding power source is not stopped.
- According to the use environment such as wires and torches and the customer’s judgment criteria, adjust the detection level at your discretion.

### 6.7.2.9 F11: Fine adjustment of welding conditions memory

When the analog remote control (optionally available) is used, fine adjustment of the welding current and welding voltage of welding condition stored on the welding condition memory is available. This function is effective when the internal function F4 (Auto/Semi-auto mode) is set to "0".

- [OFF]: disables the function.
- [1] to [30]: enables the function. Turning the welding current adjustment knob on the analog remote control enables to fine adjust the current, and turning the voltage knob enables to fine adjust the voltage.
  - Setting range : 1 to 30 %
  - Turning both of the current and voltage knobs to the center of scales sets the welding conditions to those stored on the welding condition memory. Adjust the current /voltage with the standard of the center of scales. To increase the welding current or voltage, turn the knob counterclockwise and to reduce the welding current or voltage, turn the knob clockwise.

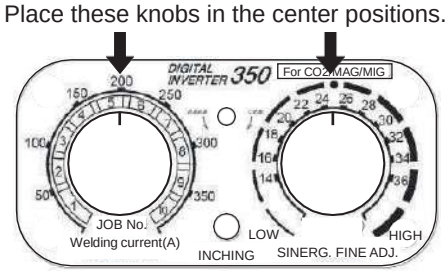


- In the following cases, this function cannot be used:
  - Welding conditions are not registered to the memory;
  - Analog remote control (optional) is not connected to the welding power source;
  - Internal function F44 (Reading welding condition with remote control) is set to "ON" (enabled);
  - Internal function F45 (Special crater sequence) is set to "ON" (enabled);
  - Internal function F48 (Adjusting current with torch switch) is set to "ON" (enabled); or
  - Internal function F51 (Special crater repeat) is set to "ON" (enabled); or
  - Either of the internal functions F29 to F32 (External input terminal setting) is set to either "4" (Start) or "5" (Loading welding condition).
  - Internal function F4 (Auto /Semi-auto mode) is set to a value other than "0" (Semi-auto mode).

### 6.7.2.10 F14/F15: Start control (time/current) adjustment

Set the time and current for start control to be performed at the time of welding start.
Depending on the welding conditions and set current value, the appropriate time and current for start control are determined; if proper burning of the wire does not occur at the time of start, adjust the time and current for start control.

For more intense burning, increase the time and current.
For less intense burning, reduce the time and current.

- Set the time from -50 to 50 % through F14 (Start control time adjustment).
- Set the current in the range from -100 to 100 A through F15 (Start control current adjustment).

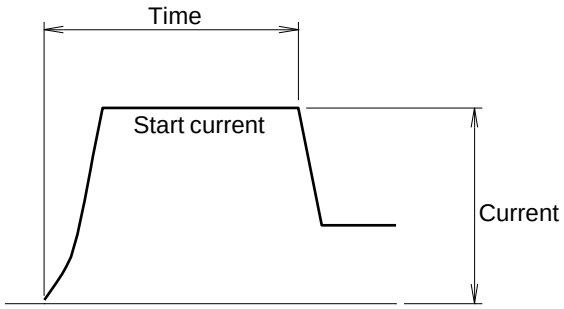

### 6.7.2.11 F16: Slowdown speed adjustment

Slow-down speed is the speed to slowly feed the wire from the time of the machine start to the time of arc start.
The slowdown speed is automatically set to an appropriate speed depending on the welding method and wire diameter; meanwhile, it can be adjusted through this function if manual setting is preferred.

The setting range is ±39 IPM (±1.0 m/min), yet cannot be adjusted slower than 16 IPM (0.4 m/min). Based on "0," adjusting it to the negative direction lowers the speed, and adjusting it to the positive direction accelerates the speed.

When the starting performance is poor, decrease the slow-down speed to a negative value (which lowers the wire feed speed).
When the starting performance is not poor, setting the slow-down speed to a positive value (which accelerates the wire feed speed) can shorten the tact time.

### 6.7.2.12 F17/F18: Anti-stick time/voltage adjustment

Set the anti-stick time /voltage, which is the anti-stick processing time and voltage. Optimum setting of the anti-stick time/voltage enables to obtain the following effects:

- At the welding completion, wire adhesion to the base material can be prevented.
- The shape of wire tip can be arranged to obtain a stable start of the next welding.

The time and voltage for anti-stick process are automatically set to appropriate conditions depending on the welding method (wire type) and wire diameter; meanwhile, it can be adjusted through this function if wire should cause adhesion at the end of welding or if burning is too intense.

- Adjust the anti-stick process time in the range of ±50 (unit: 0.01 seconds) through the internal function F17. Based on "0," adjusting it to the negative direction shortens the time, and adjusting it to the positive extends the time.
- Adjust the anti-stick process voltage in the range of ± 9.9 V through the internal function F18. Based on "0," adjusting it to the negative values decreases the voltage, and adjusting it to the positive increases the voltage.

### 6.7.2.13 F19: Switching alarm setting

When alarm occurs, the output of welding power source can be stopped.

Yet for some alarm codes, it is possible to continue welding even if the alarm level is detected, which may sometimes cause the alarm display to be ignored. Using the alarm setting switch function ensures to stop the output from the welding power source.

- [ON]: any alarm detection stops the output of welding power source.
- [OFF]: alarm detection does not stop the output of welding power source.

Means to reset alarms is the same as those for errors, including restoration of the power.☞ 9.1 Action in Case of Error)

### 6.7.2.14 F20: Low input voltage detection level

Set the low input voltage detection level on the primary side. When the input voltage is lower than the set value, an error code is displayed.
Set the value in the range of 320 to 460 V.

**TIPS**

- **The factory default setting is 370 V. However, the specification of input voltage as welding power source is the range of 414 to 506 V. If input voltage is lower than this range, it may affect welding performance.**

### 6.7.2.15 F21: Maximum cooling fan operation

The cooling fan can be rotated at the maximum rotation speed at all time.

- [ON]: The cooling fan rotates at the maximum rotation speed at all time. Even when it is set to [ON], ensure not to exceed the specified duty cycle. (☞ 2.1.4 Rated duty cycle)
- [OFF]: The cooling fan rotates in a control mode (power-saving operation) due to the temperature detection inside the welding power source.
  This mode is effective in saving power consumption and preventing suction of extra powder dusts.

### 6.7.2.16 F22: Operation sound switching

Set the operation sound not to be emitted.

- [ON]: Pressing any key on the operation panel enables to sound the operation sound.
- [OFF]: Pressing any key on the operation panel does not enable to sound any operation sound.

### 6.7.2.17 F23: Sleep mode switching time

When the welding power source is not operated for a fixed period of time, it can be turned into the sleep mode.

- [0]: disables the function.
- [1] to [10]: enables the function.
  Set the transition time to the sleep mode in the range of 1 to 10. During the sleep mode, power consumption is reduced.
  - In the sleep mode, the dot at the first digit on the left /right digital meters flashes. All the other displays on the operation panel are turned OFF.
  - Any operation during the sleep mode restores the condition to the previous state.

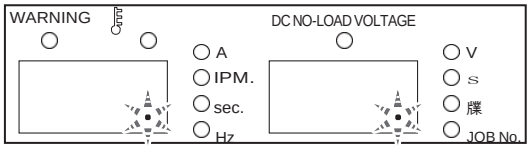

### 6.7.2.18 F24: Wire feeding speed setting

The welding current can be automatically set based on the wire feed speed.

- [ON]: enables the function.
  - The welding power source is automatically set based on the wire feed speed.
  - Even when the welding mode is changed by the GAS key, the welding current is automatically set based on the set wire feed speed.
  - Each pressing the CURRENT SETTING DISPLAY SWITCH key, the wire feed speed display and the welding current display switches alternatively. Switch to the wire feed speed display and set the feed speed in the unit of 3.9 IPM (0.1 m/min).
  - Switching to the welding current display can check the welding current value automatically set.
  - In using the welding power source in the automatic machine mode, refer to the following diagram for the relationship of command voltage and the wire feed speed (when the internal function F4 (Auto / Semi-auto mode) is used with the setting of Automatic machine 1 mode).

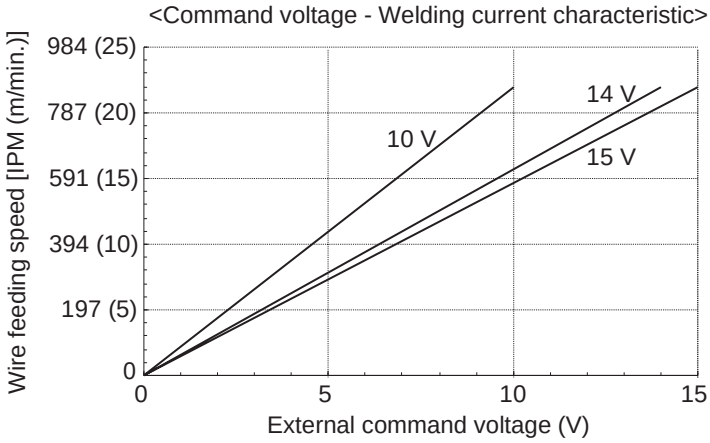


**TIPS**

- **The wire feed speed with the maximum command voltage is 866 IPM (22 m/min). (Depending on the welding mode, the wire feed speed does not always reach 866 IPM (22 m/min))**
- **The minimum wire feed speed is approximately 24 to 79 IPM (0.6 to 2.0 m/min). (This depends on the welding mode.) Even when a low command voltage is input, it is not possible to set to a value below this.**

- [OFF]: disables the function.
  - The wire feed speed is automatically set based on the welding current.
  - Even when the welding mode is changed by the GAS key, the wire feed speed is automatically set based on the set welding current.
  - Each pressing the CURRENT SETTING DISPLAY SWITCH key, the wire feed speed display and the welding current display switches alternatively. Switch to the welding current display, and set the welding current in the unit of 1 A.
  - Switching to the welding current display can check the wire feed speed automatically set.
  - In using the welding power source in the automatic machine mode, refer to the graph in " 6.7.2.3 F5: Maximum external command voltage". (When the internal function F4 (Auto /Semi-auto mode) is used with the setting of Automatic machine 1 mode)

### 6.7.2.19 F25 to F28: External output terminal setting

Through F25, you can set the functions of OUT-EXT1("3"-"4") on the terminal block for external connection.
Through F26, you can set the functions of OUT-EXT1("5"-"6") on the terminal block for external connection.
Through F27, you can set the functions of OUT-EXT1("7"-"8") on the terminal block for external connection.
Through F28, you can set the functions of OUT-EXT1("9"-"10") on the terminal block for external connection.

### 6.7.2.20 F29 to F32: External input terminal setting

Set the function of external input terminals. (when using robot or automatic machines)

- F29: set the function of IN-EXT1 ("5" to "9") on the external connection terminal block TM3.
- F30: set the function of IN-EXT2 ("6" to "9") on the external connection terminal block TM3.
- F31: set the function of IN-EXT3 ("7" to "9") on the external connection terminal block TM3.
- F32: set the function of IN-EXT4 ("8" to "9") on the external connection terminal block TM3.

For the details of external connection terminal block; (☞ 4.5.2 Connection of automatic machine)

The functions allocable to F29 to F32 are as follows:

| Setting | Function name | Explanation |
|---|---|---|
| 0 | - | No function is allocated. |
| 1 | Gas valve | Causing short circuit between terminals opens the gas valve. (*1) |
| 2 | Inching | Causing short circuit between terminals starts inching. |
| 3 | Retract | When inching operation is performed after short circuit is caused between terminals are short-circuited, the wire feeding motor reverses to retract the wire. (*2) |
| 4 | Start | Causing short circuit between terminals starts welding. (torch switch: ON)(*3) |
| 5 | Loading welding condition | The welding conditions stored on the memory can be read out by combination of signals. (*4) |
| 6 | - | No function is allocated. |
| 7 | WAVE PULSE/ PULSE switch | If "DC Pulse" or "DC Wave Pulse" has been selected, short-circuit between terminals allows DC wave pulse welding mode.<br>Open-circuit between terminals allows DC pulse welding mode.<br>If "AC Pulse" or "AC Wave Pulse" has been selected, short-circuit between terminals allows AC wave pulse welding mode.<br>Open-circuit between terminals allows AC pulse welding mode. |
| 8 | JOB shift + | Causing short circuit between terminals shifts to the following JOB No.. (*5), (*7) |
| 9 | JOB shift - | Causing short circuit between terminals shifts to the previous JOB No.. (*6), (*7) |

*1: When the gas valve is opened by the signal from the external input terminal, the gas valve will not close when welding completes or according to the timer (2 minutes). In order to stop gas, ensure to open the terminals.

*2: Causing short circuit between the external input terminals before turning on the inching signal. To stop the operation, turn off the inching signal and then disconnect the external input terminals.

*3: The starting terminal of the feeder receptacle on the front of welding power source becomes deactivated.

*4: Combination of the external input terminals enables to read out the welding conditions of the JOB No. 1 to 16 (Registration No. 1 to 16) registered on the memory. The corresponding JOB No. are as shown in the below table.

| JOB No. | Function (external input terminal) | | | |
|---|---|---|---|---|
| (Registration No.) | F29(IN-EXT1) | F30(IN-EXT2) | F31(IN-EXT3) | F32(IN-EXT4) |
| 1 | OFF (open) | OFF (open) | OFF (open) | OFF (open) |
| 2 | ON (close) | OFF (open) | OFF (open) | OFF (open) |
| 3 | OFF (open) | ON (close) | OFF (open) | OFF (open) |

| JOB No. | Function (external input terminal) | | | |
|---|---|---|---|---|
| (Registration No.) | F29(IN-EXT1) | F30(IN-EXT2) | F31(IN-EXT3) | F32(IN-EXT4) |
| 4 | ON (close) | ON (close) | OFF (open) | OFF (open) |
| 5 | OFF (open) | OFF (open) | ON (close) | OFF (open) |
| 6 | ON (close) | OFF (open) | ON (close) | OFF (open) |
| 7 | OFF (open) | ON (close) | ON (close) | OFF (open) |
| 8 | ON (close) | ON (close) | ON (close) | OFF (open) |
| 9 | OFF (open) | OFF (open) | OFF (open) | ON (close) |
| 10 | ON (close) | OFF (open) | OFF (open) | ON (close) |
| 11 | OFF (open) | ON (close) | OFF (open) | ON (close) |
| 12 | ON (close) | ON (close) | OFF (open) | ON (close) |
| 13 | OFF (open) | OFF (open) | ON (close) | ON (close) |
| 14 | ON (close) | OFF (open) | ON (close) | ON (close) |
| 15 | OFF (open) | ON (close) | ON (close) | ON (close) |
| 16 | ON (close) | ON (close) | ON (close) | ON (close) |

The external input terminal without the setting "5" is regarded as signal OFF. Accordingly, for the function (external input terminal) which does not require the "ON" status for the JOB No. to read can be set to other functions.

Example 1) In reading out the welding condition of the JOB No.3;
Setting F30 to "5" and turning the signal of external input terminal IN-EXT2 to ON enable to read out the JOB No. 3.
For F29, F31, and F32, other functions can be set.

Example 2) In reading out the welding condition of the JOB No.3;
Setting F29 to F32 to "5" and turning the signal of external input terminal IN-EXT2 to OFF enable to read out the JOB No. 3.

Example 3) In reading out the welding condition of the JOB No.7;
Setting F30 and F31 to "5" and turning the two signals of the external input terminal IN-EXT2/IN-EXT3 to ON enable to read out the JOB No. 7. For F29 and F32, other functions can be set.

*5: The JOB No. shifts to the following number and read out the condition by causing short circuit between terminals for 100msec during JOB shift mode.
If the JOB No. shifts to the largest number, it shifts to the smallest number.

*6: The JOB No. shifts to the previous number and read out the condition by causing short circuit between terminals for 100msec during JOB shift mode.
If the JOB No. shifts to the smallest number, it shifts to the largest number.

*7: When welding condition is not registered in the JOB No., it shifts to the registered JOB No.
The condition can not be changed during welding.
To release the JOB shift mode, release the external input terminals. The digital meter displays current and voltage after 2 sec have passed.

Example:
In the setting examples of F29: "5" ; F30: "0" ; F31: "5" ; and F32: "0" , the following diagram is available:

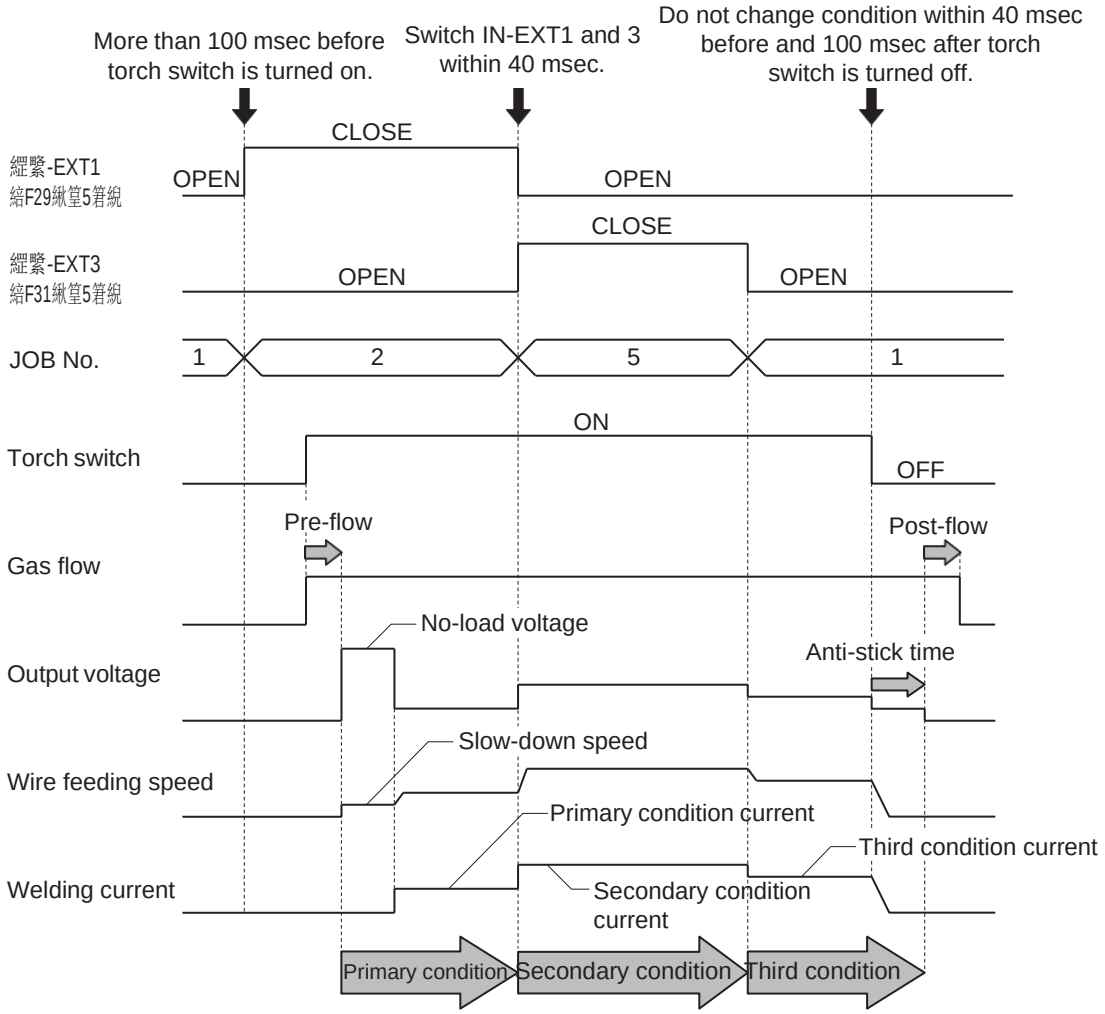


- Before 100 ms of the torch switch ON (start signal "ON"), set the welding condition to "5" for F29 to F32 to read out the welding JOB No.
- To switch plural signals at the same time, carry out the operation within 40 ms.
- From 40 ms before the torch switch OFF (start signal "OFF") to 100 ms after it, do not change the setting of "5".

### 6.7.2.21 F38: Arc voltage direct detection switching

Sets the status of the voltage direct detection terminal on the base metal side of the welding power source or voltage detection terminal of the wire feeder.

Extending the power cable without the cable at the base metal side can cause extraordinary volume of spatter or erroneous pulse welding. In this case, turning ON this function by using the voltage detection cable (optionally available) can improve the status.

Connection of voltage detection cable (optionally available) (☞ 4.6 Wiring of Voltage Detection Cable at Base Metal Side)

- [ON]: enables the function.
  Arc voltage can be detected by the voltage direct detection terminal at the base metal side /voltage direct terminal.
- [OFF]: disables the function.

**TIPS**

- **Use the voltage detection cable (optionally available) when the total length of the extension cable is 1181.1" (30 m) or longer.**
- **When using water-cooled welding torch, voltage detection cable (optionally available) cannot be used. Accordingly, arc voltage direct detection switch cannot be activated even with this function set to "ON".**

### 6.7.2.22 F39/F40: Current display adjustment (Gain/offset)

Set the adjustment value (gain / offset) when the current display value on the left digital meter is different from the actual current value.

The current value displayed on the digital meter is obtained by software processing of the average value of outputs; therefore, it may not be consistent with the value indicated on a needle meter, etc. When this happens, using this function enables to finely adjust the current display value.

- For F39, set gain, and for F40, set offset.
  Changing the set value only corrects the display; the output welding current does not change.
- For more information on the adjustment procedure, contact dealer.

**NOTE**

- **Do not carelessly change the setting of this function.**

### 6.7.2.23 F41/F42: Voltage display adjustment (Gain/offset)

Set the adjustment value (gain / offset) when the voltage display value on the right digital meter is different from the actual voltage value.

The voltage value displayed on the digital meter is obtained by software processing of the average value of outputs; therefore, it may not be consistent with the value indicated on a needle meter, etc. When this happens, using this function enables to finely adjust the voltage display value.

- For F41, set gain, and for F42, set offset.
  Changing the set value only corrects the display; the output welding voltage does not change.
- For more information on the adjustment procedure, contact dealer.

**NOTE**

- **Do not carelessly change the setting of this function.**

### 6.7.2.24 F43: CAN ID

When multiple welding power sources are connected with a PC monitoring system, set ID for CAN.

### 6.7.2.25 F44: Reading welding conditions with remote control

Sets whether to read the welding condition registered to the memory by the analog remote control (optional) or not. This function is effective when the internal function F4 (Auto / Semi-auto mode) is set to "0".

- [ON]: reads the welding condition by the analog remote control (optional)
  - Setting the welding current setting knob on the analog remote control to 1-10 of the scale can read out the conditions stored to the JOB No. 1-10.
  - By the welding voltage setting knob, fine adjustment of the welding voltage of the condition read out is available. (% adjustment)
    Adjust the voltage value based on the center of welding voltage setting knob. To increase the welding voltage, turn the knob clockwise and to reduce the welding voltage, turn the knob counterclockwise. The fine adjustment range for welding voltage is up to ±20 %.

**Example:**
**The right figure shows an example when the JOB No. "3" is read out and the welding voltage is the condition stored on the memory (no fine adjustment).**

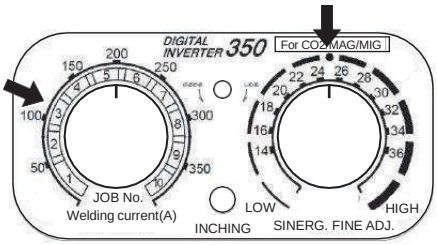


- [OFF]: disables the function.
- In the following cases, this function cannot be used:
  - Welding conditions are not registered to the memory;
  - Analog remote control (optional) is not connected to the welding power source;
  - Internal function F11 (Fine adjustment of welding conditions memory) is set to "1" to "30" (enabled);
  - Internal function F45 (Special crater sequence) is set to "ON" (enabled);
  - Internal function F48 (Adjusting current with torch switch) is set to "ON" (enabled); or
  - Internal function F51 (Special crater repeat) is set to "ON" (enabled); or
  - Either of the internal functions F29 to F32 (External input terminal setting) is set to either "4" (Start) or "5" (Loading welding condition).

### 6.7.2.26 F45/F46/F47: Special crater sequence (effective/initial standard time setting/ crater standard time setting)

Incorporates initial condition and crater condition in the "No crater" sequence.

- Setting the internal function F45 to [ON] enables to carry out the initial welding /crater treatment set by F46 /F47 even in the welding of "No crater" condition.
- When this function is enabled, the LED of "No crater" of the CRATER-FILL key flashes, enabling the internal functions F46 and F47.
- To the internal function F46, set the time for initial welding in the range of 0.0 to 10.0 seconds. Set the value in the range of 0.0 to 10.0 seconds.
- To the internal function F47, set the crater treatment time in the range of 0.0 to 10.0 seconds. Set the value in the range of 0.0 to 10.0 seconds.

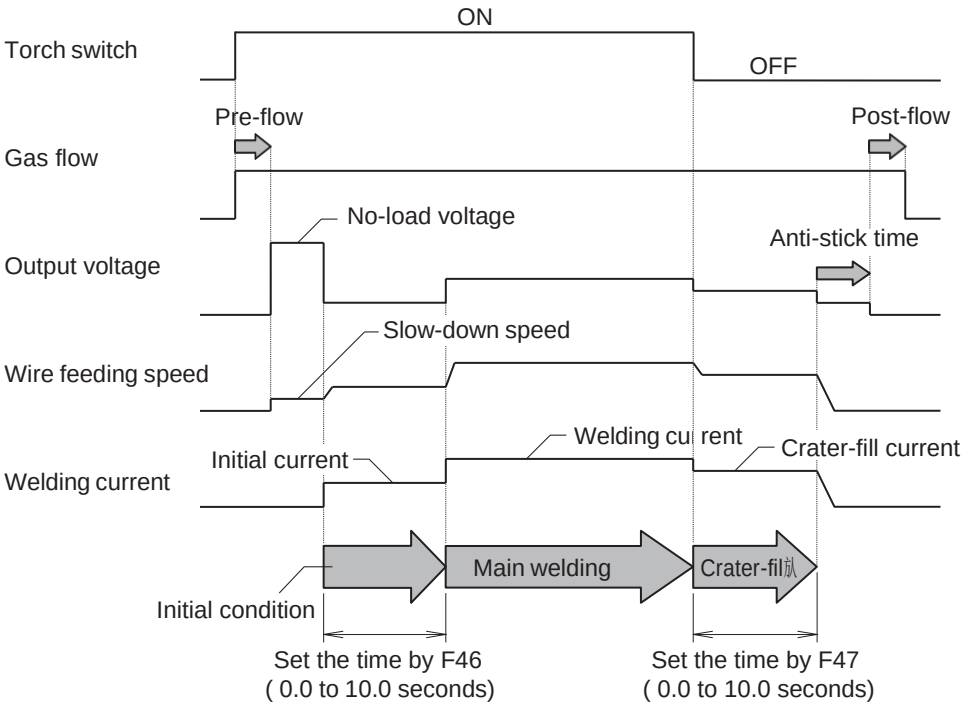


**TIPS**

- **When the internal function F45 is set to [ON], automatically the setting of "No crater" is selected, disabling other welding modes. (The CRATER-FILL key does not work.)**
- **Welding method at crater treatment is the same as that of main welding.**

- In the following cases, this function cannot be used:
  - Internal function F11 (Fine adjustment of welding conditions memory) is set to "1" to "30" (enabled);
  - Internal function F44 (Reading welding condition with remote control) is set to "ON" (enabled);
  - Internal function F48 (Adjusting current with torch switch) is set to "ON" (enabled); or
  - Internal function F51 (Special crater repeat) is set to "ON" (enabled); or
  - Either of the internal function F29 to F32 (External input terminal setting) is set to "5" (Loading welding condition).

### 6.7.2.27 F48: Adjusting current with torch switch

Increases/decreases the welding current by the torch switch operation.

- [ON]: the setting of "CRATER-FILL ON" is selected, enabling to increase or decrease welding current by single-clicking or double-clicking the torch switch in the period of welding condition (during start input holding)
  If this function is enabled, the LED of "CRATER-FILL ON" of the CRATER-FILL key flashes.
  Set the increase/decrease current volume through F49 (Current increase and decrease by single-clicking) and F50 (Current increase and decrease by double-clicking).
- [OFF]: disables the function.

**TIPS**

- **When the internal function F45 is set to [ON], automatically the setting of "CRATER-FILL ON" is selected, disabling other welding modes. (The CRATER-FILL key does not work.)**
- **Setting for current increase and decrease is available for both single-clicking and doubleclicking.**
- **Single-clicking or double-clicking operation should be within 0.3 seconds.**
- **At the time of transition to crater, press the torch switch for at least 0.3 seconds.**
- **Welding method at crater treatment is the same as that of main welding.**

Example:
In the setting examples of Crater setting: ON; Initial condition: OFF; Welding current: 100 A; Crater current: 60 A; F48: "ON"; F49:"-10"; and F50: "20", the following diagram is available:

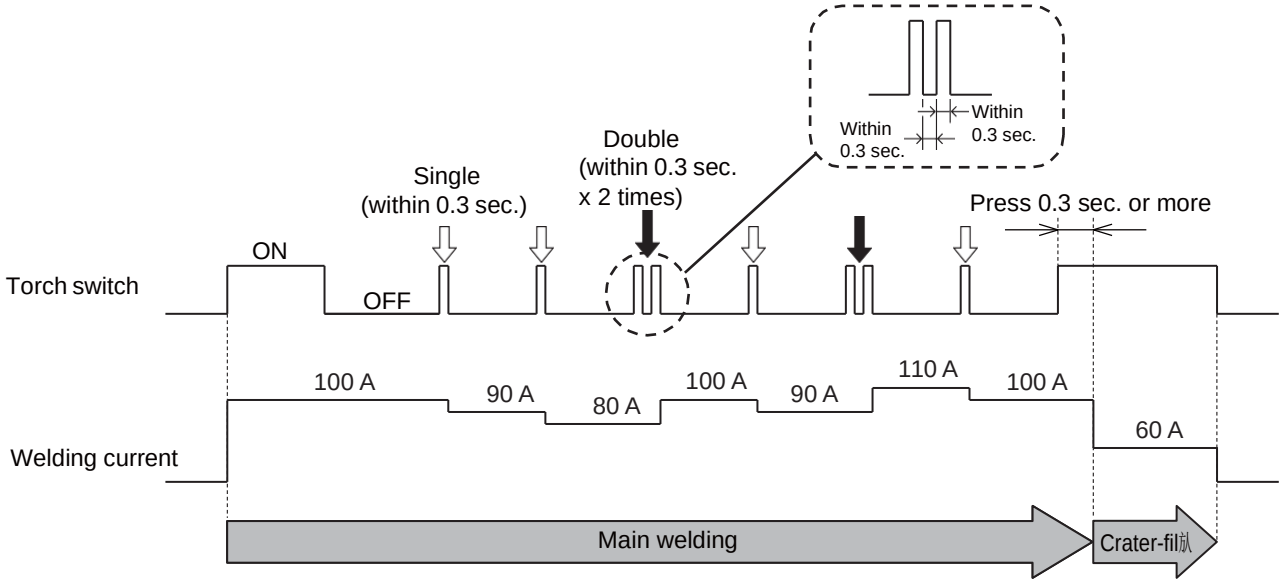


- In the following cases, this function cannot be used:
  - An analog remote control (optional) is connected.
  - Internal function F11 (Fine adjustment of welding conditions memory) is set to "1" to "30" (enabled);
  - Internal function F44 (Reading welding condition with remote control) is set to "ON" (enabled);
  - Internal function F45 (Special crater sequence) is set to "ON" (enabled);
  - Internal function F51 (Special crater repeat) is set to "ON" (enabled); or
  - Either of the internal functions F29 to F32 (External input terminal setting) is set to either "4" (Start) or "5" (Loading welding condition).

### 6.7.2.28 F49: Current increase and decrease by single-clicking

To increase / decrease the welding current by the torch switch operation, set the current increase / decrease volume at single-clicking. This function is available when the internal function F48 (Adjusting current with torch switch) is set to [ON].

- Set the current increase/decrease volume by single-clicking in the range of -100 to 100 A.

### 6.7.2.29 F50: Current increase and decrease by double-clicking

To increase / decrease the welding current by the torch switch operation, set the current increase / decrease volume at double-clicking. This function is available when the internal function F48 (Adjusting current with torch switch) is set to [ON].

- Set the current increase/decrease volume by double-clicking in the range of -100 to 100 A.

### 6.7.2.30 F51: Special crater repeat

In the sequence of main welding of the "CRATER-FILL ON (REPEATED)" (during start input holding), the torch switch operation can switch the welding and crater treatment repeatedly as many time as needed.

- [ON]: Setting of "CRATER-FILL ON (REPEATED)" is applied, and transits to the crater treatment by single-clicking of the torch switch during the welding sequence (start input holding). It is available to return to the main welding as many times as needed even after transit to the crater treatment by single-clicking of the torch switch.
  When this function is enabled, the LED of "CRATER-FILL ON (REPEATED)" of the CRATER-FILL key flashes.
- [OFF]: disables the function.

**TIPS**

- **When this function is set to [ON], automatically the setting of "CRATER-FILL ON (REPEATED)" is selected, disabling other welding modes. (The CRATER-FILL key does not work.)**
- **Single-clicking operation should be within 0.3 seconds.**
- **At the time of transition to crater, press the torch switch for at least 0.3 seconds.**
- **Welding method at crater treatment is the same as that of main welding.**

Example:
In the setting examples of Initial welding current: 80 A; Main welding current: 100 A; and Crater current: 60 A, the following diagram is available:

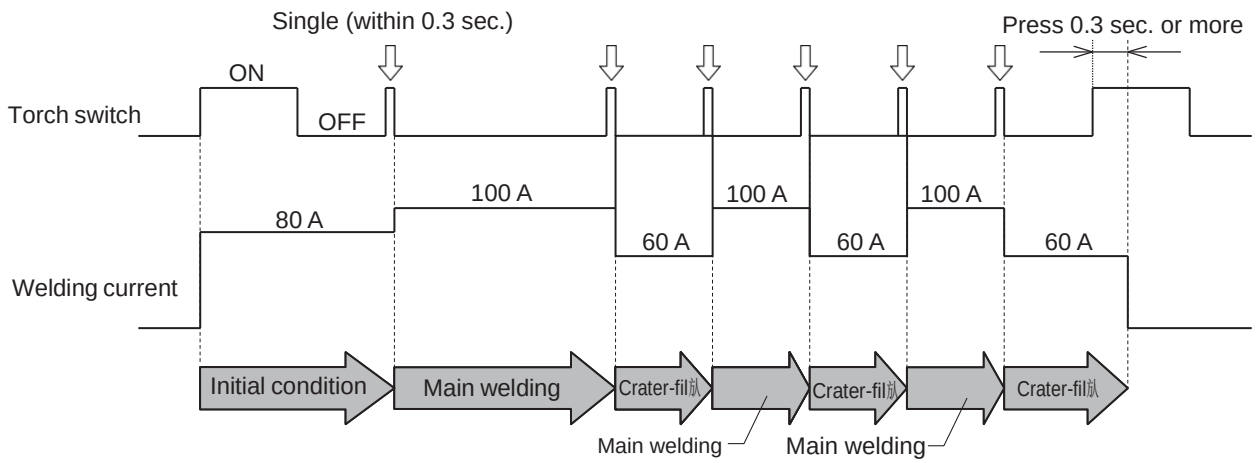


- In the following cases, this function cannot be used:
  - Internal function F11 (Fine adjustment of welding conditions memory) is set to "1" to "30" (enabled);
  - Internal function F44 (Reading welding condition with remote control) is set to "ON" (enabled);
  - Internal function F45 (Special crater sequence) is set to "ON" (enabled);
  - Internal function F48 (Adjusting current with torch switch) is set to "ON" (enabled); or
  - Either of the internal functions F29 to F32 (External input terminal setting) is set to either "4" (Start) or "5" (Loading welding condition).

### 6.7.2.31 F52: Data type of data log function

This function enables to select data to save when using the data log function.
The patterns of data which can be saved are as shown in the below table.

| Setting | Welding current (Command value) | Welding current (Detected value) | Welding voltage (Command value) | Welding voltage (Detected value) | Wire feed speed (Command value) | Wire feed speed (Detected value) |
|---|---|---|---|---|---|---|
| 0 | - | - | - | - | - | - |
| 1 | - | Storable | - | Storable | - | Storable |
| 2 | Storable | - | Storable | - | Storable | - |
| 3 | Storable | Storable | - | Storable | - | - |
| 4 | Storable | Storable | - | - | - | Storable |
| 5 | - | Storable | Storable | Storable | - | - |
| 6 | - | - | Storable | Storable | - | Storable |
| 7 | - | Storable | - | - | Storable | Storable |
| 8 | - | - | - | Storable | Storable | Storable |

For data log function; (☞ 7.3 Data Backup (Utilization of data)).

### 6.7.2.32 F53: Sampling speed of data log function

Selects the data sampling interval in using data log function.
The relationship between the setting value and the data sampling is as follows:

| Setting | Sampling interval |
|---|---|
| 1 | 10 ms |
| 2 | 100 ms |
| 3 | 1 s |

For data log function; (☞ 7.3 Data Backup (Utilization of data)).

### 6.7.2.33 F54 Tack start process

This function enables to start the wire feeding speed with the normal feeding speed without slow-down after the welding completion. (Which enables the tack welding of less transition time)

- [ON]: Pressing the torch switch within 0.5 seconds after the welding completion can start it with the normal feeding speed. (The wire feeding speed at this time is not exceeding 197 IPM (5m/min).)
- [OFF]: disables the function.

### 6.7.2.34 F55 to F59: Reserved

Used in connection with the automatic machines of other manufacturers.

### 6.7.2.35 F60: Fine adjustment of pulse peak current

This function allows fine adjustment of the standard pulse peak current; by setting the adjustment value, finely adjusted pulse peak current can be obtained.
Moreover, in the pulse condition of the wave pulse welding at HIGH side, fine adjustment is available to the standard pulse peak current at HIGH side by setting the adjustment value.

Example of current waveform of wave pulse welding (☞ 6.7.2.40 F65: Fine adjustment of L base current)

Set the adjustment value in the range of -150 to 150 A.

<Fine adjustment of unit pulse condition>
The unit pulse conditions (such as pulse peak current, pulse peak time, and base current) at pulse welding are properly set according to welding method or wire diameter.
Using internal functions F60 to F65 enables change on the unit pulse conditions according to the wire type or welding style.

- Fine adjustment value display/Absolute value display in unit pulse condition
  During the setting of internal functions F60 to F65, pressing the DISPLAY CHANGE key enables switching the display of fine adjustment value / absolute values. The LED of DISPLAY CHANGE key gives information which value is currently displayed.
  - When LED is OFF: Fine adjustment value is displayed (Adjusted value is displayed on the left digital meter))
  - When LED is ON: Absolute value is displayed (Values adjusted from the standard value is displayed on the left digital meter))

- For optimum fine adjustment:
  For fine adjustment of unit pulse condition, first adjust the pulse peak time.
  - When large droplet and unstable arc (droplet transfer) occurs, adjust to a longer pulse peak time.
  - Adjust to a shorter pulse peak time when tip of wire becomes sharp and extremely strong arc occurs.

    **For more improvement, adjust the pulse peak current following the same steps as pulse peak time adjustment.**

**TIPS**

- **Maximum pulse peak current which can be output varies depending on the type (capability) of welding power source or arc load.**
- **When the pulse peak current finely adjusted exceeds the maximum pulse peak current, the preset pulse peak current is not output.**

### 6.7.2.36 F61: Fine adjustment of pulse peak time

This function allows fine adjustment of the standard pulse peak time; by setting the adjustment value, finely adjusted pulse peak time can be obtained.
Moreover, in the pulse condition of the wave pulse welding at HIGH side, fine adjustment is available to the standard pulse peak time at HIGH side by setting the adjustment value.
Example of current waveform of wave pulse welding (☞ 6.7.2.40 F65: Fine adjustment of L base current)

Set the adjustment value in the range of -1.5 to 1.5 ms.

Fine adjustment of unit pulse condition (☞ 6.7.2.35 F60: Fine adjustment of pulse peak current, <Fine adjustment of unit pulse condition>)
Example of current waveform of wave pulse welding (☞ 6.7.2.40 F65: Fine adjustment of L base current)

### 6.7.2.37 F62: Fine adjustment of base current

This function allows fine adjustment of the standard base current; by setting the adjustment value, finely adjusted base current can be obtained.

Set the adjustment value in the range of -60 to 60 A.

Fine adjustment of unit pulse condition (☞ 6.7.2.35 F60: Fine adjustment of pulse peak current, <Fine adjustment of unit pulse condition>)

### 6.7.2.38 F63: Fine adjustment of L pulse peak current

This function allows fine adjustment of the standard pulse peak current at LOW side in the pulse condition of the wave pulse welding; by setting the adjustment value, finely adjusted pulse peak current at LOW side can be obtained.

Set the adjustment value in the range of -150 to 150 A.

Fine adjustment of unit pulse condition (☞ 6.7.2.35 F60: Fine adjustment of pulse peak current, <Fine adjustment of unit pulse condition>)
Example of current waveform of wave pulse welding (☞ 6.7.2.40 F65: Fine adjustment of L base current)

### 6.7.2.39 F64: Fine adjustment of L pulse peak time

This function allows fine adjustment of the standard pulse peak time at LOW side in the pulse condition of the wave pulse welding; by setting the adjustment value, finely adjusted pulse peak time at LOW side can be obtained.

Set the adjustment value in the range of -1.5 to 1.5 ms.

Fine adjustment of unit pulse condition (☞ 6.7.2.35 F60: Fine adjustment of pulse peak current, <Fine adjustment of unit pulse condition>)
Example of current waveform of wave pulse welding (☞ 6.7.2.40 F65: Fine adjustment of L base current)

### 6.7.2.40 F65: Fine adjustment of L base current

This function allows fine adjustment of the standard pulse base current at LOW side in the pulse condition of the wave pulse welding; by setting the adjustment value, finely adjusted pulse base current at LOW side can be obtained.

Set the adjustment value in the range of -60 to 60 A.

Fine adjustment of unit pulse condition (☞ 6.7.2.35 F60: Fine adjustment of pulse peak current, <Fine adjustment of unit pulse condition>)

<Example of current waveform of wave pulse welding>

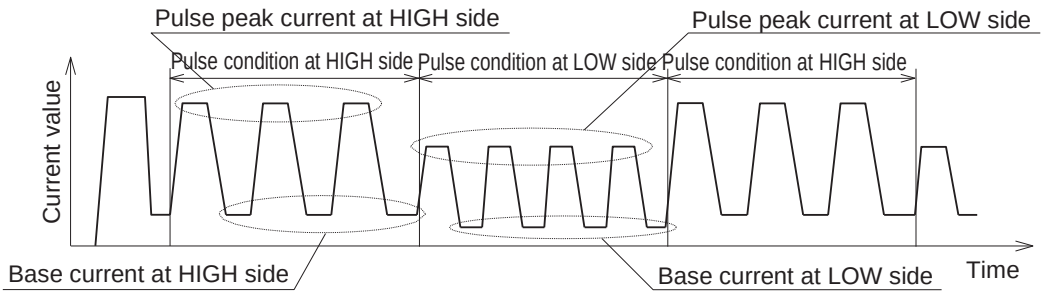


### 6.7.2.41 F66: Adjustment of feed amplitude ratio

This function sets the feed amplitude ratio of wire (amplitude change of wire feed speed) in the wave pulse welding.
When the wave frequency is under 5 Hz, the wire feed speed is adjusted. By fine adjusting the amplitude of this feed speed, optimized welding result for the specific purpose can be obtained.

Set the adjustment value in the range from 0 to 100%, with 50% as the standard value.

The relationship between the set value and the welding result is shown in the below table:

| Parameter | 0% (Minimum value) | 100% (Maximum value) |
|---|---|---|
| Changes to wire feed | None (constant speed) | Twice the standard speed |
| Changes in arc | Decreased | Increased |
| Changes in ripple bead | Smooth/Small | Distinct/Large (*1) |
| Reduction of blow hole | Less effective | Effective |
| Applied travel speed | Low to high | Low |
| Gap allowance | Slightly small | Slightly large |

*1: Mild steel or stainless may have no change from the status of 50% (standard) even with the adjustment of 100%, since the molten metal flows away before getting solidified.

### 6.7.2.42 F67: Setting change of current value (initial condition, crater condition)

When “CRATER ON” is selected, the current value of the initial condition and the crater condition can be set in percentage based on the current value of the welding condition.

- [ON]: enables the function.
  Set the current value of the initial condition with F68, and set the current value of the crater condition with F69.
- [OFF]: disables the function.

### 6.7.2.43 F68: Setting of current value (initial condition)

The current value of the initial condition can be set in percentage based on the current value of the welding condition.

- Setting range of current value (initial condition): 10 % to 300 %

### 6.7.2.44 F69: Setting of current value (crater condition)

The current value of the crater condition can be set in percentage based on the current value of welding condition.

- Setting range of current value (crater condition): 10 % to 300 %

### 6.7.2.45 F81: Setting to use torch switch in TIG mode

When "DC TIG" welding is selected for the welding method, ON/OFF of the output is controlled by the torch switch.

- [ON]: This function is enabled. Crater sequence, gas control, welding management functions are also enabled.
- [OFF]: This function is disabled.

# 6.8 Operation of Analog Remote Control (Optional)

This section explains the functions of knobs and buttons arranged for the analog remote controller (optional) as well as their operation.
Since the setting at the analog remote control is preferred when connected, it is not possible to set this condition on the operation panel of welding power source. (The initial condition and crater condition can be set on the operation panel.)

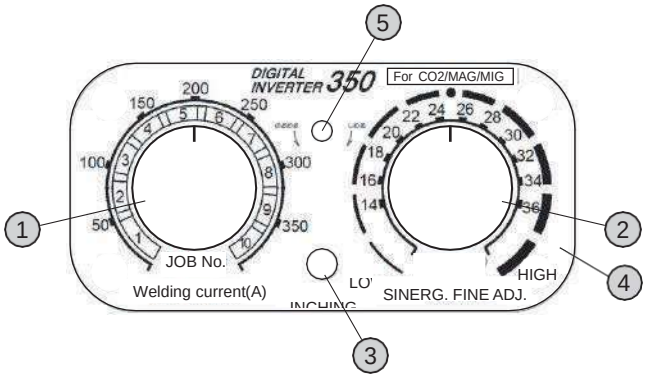


| No. | Name | Function |
|---|---|---|
| 1 | Welding current adjustment knob | Set the welding current. The set value is displayed on the left digital meter at the welding power source side. |
| 2 | Welding voltage adjustment knob | Set the welding voltage. The set value is displayed on the right digital meter at the welding power source side.<br>• < SYNERGIC adjustment ><br>Optimum welding voltage according to the welding current is automatically set, and fine adjustment is available for the set welding voltage.<br>Align the welding voltage adjustment knob to the center (" ● " mark), and adjust the voltage with the position as the standard.<br>• < INDIVIDUAL adjustment ><br>The welding voltage can be individually adjusted without being influenced by the welding current. |
| 3 | Inching button | Feeds the wire. (☞ 5.4 Wire Inching)<br>During when the button is pressed, the wire feeding is carried out.<br>Wire feed speed can be adjusted by the welding current adjustment knob while pressing the inching button. |
| 4 | Scale plate (*1) | Replace the scale plate for analog remote control (☞ 6.7.2.7 F9: Analog remote control scale) when using the optional analog remote control. Note that the scale of analog remote control as well as the scale plate to be used depends on the rated output current of the welding power source. (Above diagram shows an example with 350 A)<br>• 350A: 350/200<br>• 500A: 500/350/200 |
| 5 | Fixing screw | To replace the scale plate, turn the screw counter clockwise, and remove them. |

*1: For adjustment of low current region when using a thin wire, etc., using the accessory scale plate with full scale of 200A allows fine adjustment. To use this scale plates, set the internal function F9 function. (☞ 6.7.2.7 F9: Analog remote control scale)

**TIPS**

- In connecting (or removing) the analog remote control to (or from) the welding power source, turn OFF the power switch of the welding power source.
- The analog remote control is automatically recognized after being connected to the analog remote control and turning ON the power switch.

# Chapter 7 Administrator Functions



This chapter explains the functions used by administrators such as protection and initialization of welding conditions.

## 7.1 Protection of Welding Conditions

This section explains the protection function (password function) of welding conditions. When the function is enabled, ☞5.5.2 Preventing erroneous operation on operation panela password will be requested to disable the erroneous operation prevention function.
The erroneous operation prevention function prohibits the following operations to prevent accidental change of welding conditions.

- Setting welding conditions (Checking of settings is allowed)
- Operating the mode switching keys and the parameter adjusting knob

Functions such as gas check that do not affect the welding conditions will not be prohibited. The operations above will become possible if the erroneous operation prevention function is disabled.

**NOTE**

- **Write down the password on a piece of paper and store it safely.**
- **The current password will be requested also when you change it.**
- **If a password is set and the erroneous operation prevention function is enabled, the erroneous operation prevention function will not be disabled even if the power is turned off and on or if the welding conditions and internal functions are initialized.**
- **If the password is lost, please contact your dealer.**

### 7.1.1 Setting/Changing password

This section explains how to set and change the password.

- Welding is not possible during setting the password.
- Set a three-digit number other than "000" as the password. Setting "000" does not set a password. (No password specified)
- To change the password on the way, press the DISPLAY CHANGE key and move the digit position to the hundreds place.
- To cancel setting of the password, turn off the power switch.

**NOTE**

- **First determine a specified number and write it down on a piece of paper, and then set the number as the password having the paper at hand.**

STEP

1. **Turn off the power switch.**
2. **Press and hold the F (function) key and the ENTER key simultaneously and turn on the power switch.**

- Hold the two keys pressed down until "Loc" is displayed on the left digital meter. "PAS" -> "Loc" will be displayed in order.)
  Release the keys after "Loc" is displayed.
- If a password has already been set, "Loc" will flash. To change the password, delete the password with the operation from the step 2 of "7.1.2 Disabling erroneous operation prevention" and go to the next step. (☞ 7.1.2 Disabling erroneous operation prevention)
- If a password has not been set yet, "Loc" lights up. Check that "Loc" is not flashing before starting the next step.

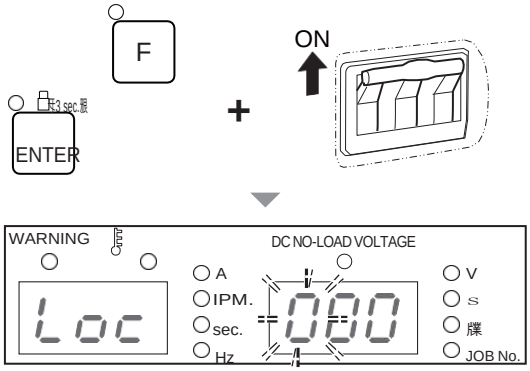


3. **Turn the parameter adjusting knob to set the hundreds place digit.**

- The hundreds place flashes on the right digital meter. Display the desired number and press the DISPLAY CHANGE key.
  Then the tens place will flash on the right digital meter.

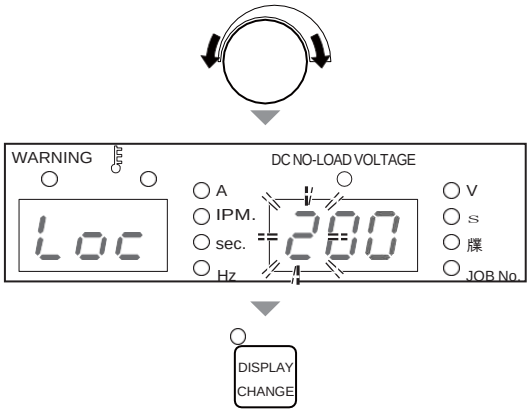


4. **Set the tens place digit and ones place digit in the same manner as the step 3.**
5. **Press the ENTER key.**

* The left and the right digital meters flash alternately.

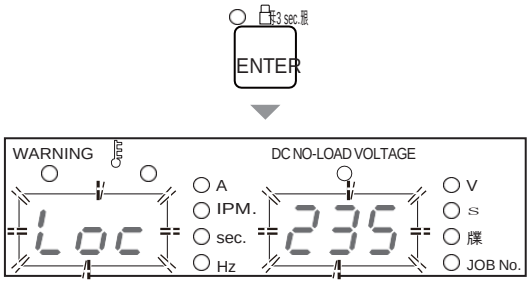


6. **Check that the password is correct and press the ENTER key.**

* The password has been set.

**TIPS**

- **After the password is set, if the ENTER key is pressed and held for three seconds or more, the LED of the ENTER key flashes and the erroneous operation prevention function becomes enabled. To disable the erroneous operation prevention function, the password will be requested.**

## 7.1.2 Disabling erroneous operation prevention

This section explains how to disable the password-protected erroneous operation prevention function.

- To change the password on the way, press the DISPLAY CHANGE key and move the digit position to the hundreds place.
- To cancel deleting the password, press and hold the F (function) key for one second or more.

**STEP**

1. **Press and hold the ENTER key for three seconds or more.**

   * "Loc" flashes on the left digital meter.
     ("PAS" -> "Loc" will be displayed in order.)

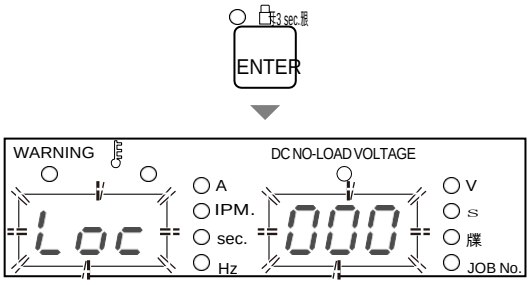


2. **Turn the parameter adjusting knob to select the hundreds place digit specified as password.**

   ● The hundreds place flashes on the right digital meter. Display the number specified as the password and press the DISPLAY CHANGE key.
   Then the tens place will flash on the right digital meter.

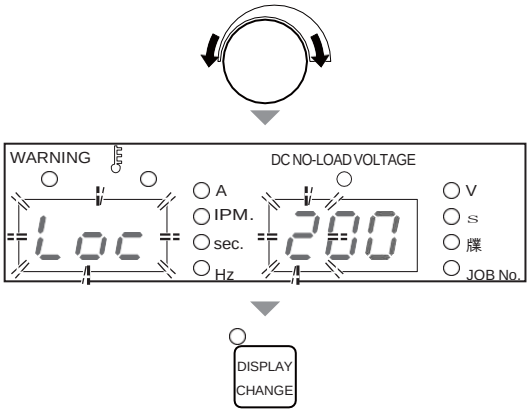


3. **Select the tens place digit and ones place digit in the same manner as the step 2.**
4. **Press the ENTER key.**

   * When the number matches the set password, "goo" / "d" are displayed on the left /right digital meters respectively and the lock will be released.
   * If the number does not match the set password, "bAd" is displayed on the left digital meter and the status returns to the step 2.

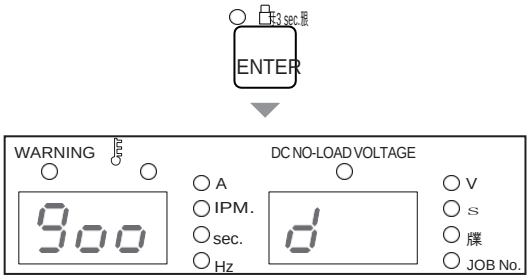

# 7.2 Welding Result Control Function

This section explains about the welding result control function. The function enables the management of the items below.

| Welding control parameter | Monitor No. | Initial value | Setting range | Explanation |
|---|---|---|---|---|
| Number of welding point | P10 | 0 | - | Cumulative number of welding points (number of times) |
| | P11 | 0 | 0 to 999 | Target value of welding points (number of times) |
| | P12 | 0 | 0 to 5 | Operation at the time when the target value of welding points is achieved |
| Wire consumption | P20 | 0.00 | - | Cumulative wire consumption used in welding [lbs (kg)] |
| | P21 | 0 | 0 to 999 (0 to 453) | Target wire consumption [lbs (kg)] |
| | P22 | 0 | 0 to 5 | Operation at the time when the target wire consumption is achieved |
| Total welding time | P30 | 0 | - | Cumulative total welding time (minute) |
| | P31 | 0 | 0 to 999 | Target total welding time (minute) |
| | P32 | 0 | 0 to 5 | Operation at the time when the target total welding time is achieved |
| Welding monitor | P40 | 0 | - | Max. fluctuation value of average range monitor (A or V) |
| | P41 | 100 | 0 to 100 | Current tolerance (+) (%) |
| | P42 | 100 | 0 to 100 | Current tolerance (-) (%) |
| | P43 | 100 | 0 to 100 | Voltage tolerance (+) (%) |
| | P44 | 100 | 0 to 100 | Voltage tolerance (-) (%) |
| | P45 | 0 | 0 to 100 | WARNING judgment time (second) |
| | P46 | 0 | 0 to 2 | Operation at the time of WARNING detection |
| Total operation time | P50 | 0.0 | — | Cumulative total operation time (hour) |
| | P51 | 0.0 | — | Cumulative total welding time (hour) |
| | P52 | OFF | cLr/OFF | Clear the control data |

Details of control contents (☞ 7.2.2 Details of welding control items)

## 7.2.1 Setting welding result control function

This section explains how to set the welding result control function.

STEP

1. **Press and hold the WELD MONITOR key for one second or more.**

- The LED of WELD MONITOR key lights up.
- The monitor No. is displayed on the left digital meter.
- The data value specified for the monitor No. is displayed on the right digital meter.

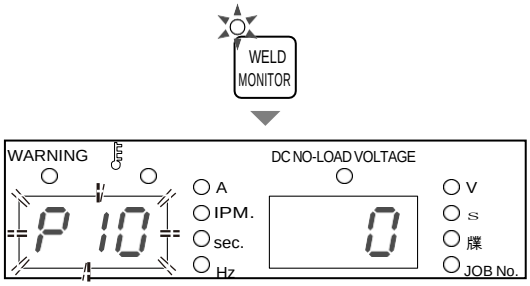

2. **With the parameter adjusting knob and the WELD MONITOR key, select the desired monitor No.**

- Turning the parameter adjusting knob will change the tens place digit of monitor No. (Example: "P10" -> "P20" -> "P30" -> "P40")
- Pressing the WELD MONITOR key briefly will change the ones place digit of monitor No. (Example: "P10" -> "P11" -> "P12")

* When an appropriate monitor No. is selected on the left digital meter, the right digital meter will flash.

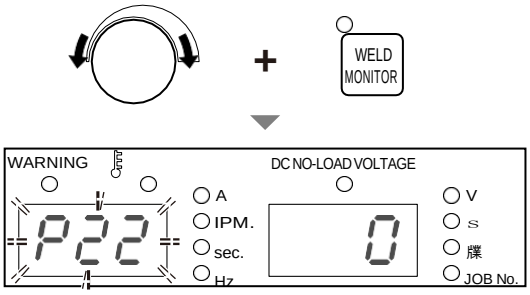


3. **Turn the parameter adjustment knob, and change the setting value.**

* The set value is displayed on the right digital meter.

* To select another monitor No., press the WELD MONITOR key briefly and set the ones place digit to "0" on the left digital meter, and perform the step 2.

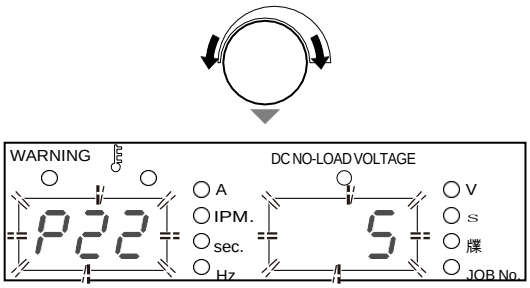


4. **Press and hold the WELD MONITOR key for one second or more.**

* The changed data values are saved and the LED of WELD MONITOR key lights off.

* When the set target is achieved or at the time of WARNING detection, an alarm will appear on the left/right digital meters. (☞ 7.2.2 Details of welding control items)

## 7.2.2 Details of welding control items

This section explains about details of the welding control items.

### 7.2.2.1 Number of welding point

The number of welding points is controlled according to the setting range.

- P10 (Cumulative number of welding points)
  The interval from the start of current flowing triggered by the torch switch ON to the stop of output triggered by the torch switch OFF is regarded as one count (one welding point) and accumulated.

  The setting range of count value is between 0 and 999. The count value will be cleared according to the "P12" setting. (If continuous operation is enabled, the value will be cleared when exceeding 999 and return to 0.)

- P11 (Target value of welding points)
  Select the target value of welding points in the range from 0 to 999. When the "P10" count value reaches the number of welding points specified here, an alarm appears indicating that the target is achieved. (☞ 7.2.2.6 Alarm indication when target is achieved)

- P12 (Operation at the time when the target value of welding points is achieved)
  Select the operation from 0 to 5 for the time when the target specified for "P11" is achieved. The set values and operations when the target is achieved are as below.

| Operation | Set value | | | | | |
|---|---|---|---|---|---|---|
| | | | | | | |
| The count value is cleared when the target is achieved (*1) | Yes | No | Yes | No | No | No |
| Operation is continued after the target is achieved (*2) | Enable | Enable | Enable | Enable | Disabled | Disabled |
| The count value is cleared when the power is turned on | Yes | Yes | No | No | Yes | No |

*1: When an alarm is displayed, pressing any key of the operation panel can also clear the count value.
*2: If "Disabled" is selected and the target is achieved, next welding cannot start until any key on the operation panel is pressed.

### 7.2.2.2 Wire consumption

Wire consumption is controlled according to the setting range.

- P20 (Cumulative wire consumption used in welding)
  Wire consumption [lbs (kg)] used in welding is measured and counted.

  The setting range of count value is between 0 and 999 lbs (0 and 453 kg). The count value will be cleared according to the "P22" setting.
  (If continuous operation is enabled, the value will be cleared when exceeding 999 and returns to 0.)

**TIPS**

- **Approximate wire consumption will be obtained with the wire consumption control function.**
  **The table below shows the wire unit amount [lbs (g/m)] calculated from the specific gravity (g/cm³) of the wire material. Wire consumption is calculated based on the unit amount and the wire feeding amount during welding. Therefore, there will be differences between the actual consumption and the calculated value depending on the wire constituents.**
- **When wire consumption is 220.5 lbs (100 kg) or lower, the value after the decimal point is also displayed.**
- **The wire consumption used in inching or wire slowdown is not measured.**
- **Special wires not listed in the table below are not measured.**

| Wire diameter [in. (mm)] | Unit amount [lbs (g/m)] | | |
|---|---|---|---|
| | Mild steel solid | Stainless steel | Aluminum |
| .020 (0.6) | 0.0049 (2.2) | - | - |
| .030 (0.8) | 0.0086 (3.9) | 0.0088 (4.0) | - |
| .035 (0.9) | 0.0110 (5.0) | 0.0112 (5.1) | - |
| .040 (1.0) | 0.0137 (6.2) | 0.0139 (6.3) | 0.0046 (2.1) |
| .045 (1.2) | 0.0196 (8.9) | 0.0198 (9.0) | 0.0066 (3.0) |
| .052 (1.4) | 0.0267 (12.1) | - | - |
| 1/16 (1.6) | 0.0348 (15.8) | 0.0351 (15.9) | 0.0119 (5.4) |

- P21 (Target wire consumption)
  Select the target value of wire consumption in the range from 0 to 999 lbs (0 to 453 kg).
  When the "P20" count value reaches the wire consumption specified here, an alarm appears indicating that the target is achieved. (☞ 7.2.2.6 Alarm indication when target is achieved)

- P22 (Operation at the time when the target wire consumption is achieved)
  Select the operation from 0 to 5 for the time when the target specified for "P21" is achieved.
  The set values and operations when the target is achieved are the same as those of the "P12" function. "P12 (Operation at the time when the target number of welding points is achieved)" (☞ 7.2.2.1 Number of welding point)

### 7.2.2.3 Total welding time

The total welding time is controlled according to the setting range.

- P30 (Cumulative total welding time)
  Every interval from the start of current flowing triggered by the torch switch ON to the stop of output triggered by the torch switch OFF is counted and accumulated as welding time.

  The setting range of count value is between 0 and 999 minutes. The count value will be cleared according to the "P32" setting. (If continuous operation is enabled, the value will be cleared when exceeding 999 and returns to 0.)

- P31 (Target total welding time)
  Select the target value of total welding time in the range from 0 to 999 minutes.
  When the "P30" count value reaches the total welding time specified here, an alarm displays indicating that the target is achieved. (☞7.2.2.6 Alarm indication when target is achieved)

- P 32 (Operation at the time when the target total welding time is achieved)
  Select the operation from 0 to 5 for the time when the target specified for "P31" is achieved.
  The set values and operations when the target is achieved are the same as those of the "P12" function. "P12 (Operation at the time when the target number of welding points is achieved)" (☞ 7.2.2.1 Number of welding point)

### 7.2.2.4 Welding monitor

Average current /voltage during welding is monitored. When it exceeds the range specified here, an alarm displays and the output stops.

- P40 (Max. fluctuation value of average range monitor)
  If the average current /voltage (per second) becomes out of the allowable tolerance range specified in "P41" to "P44", an alarm is displayed indicating the following. (☞ 7.2.2.7 Alarm indication at the time of WARNING detection (Welding Monitor "P45" "P46"))

| | |
|---|---|
| If the current is out of the range | : Difference (A) between the set value and the average value of welding current |
| If the voltage is out of the range | : Difference (V) between the set value and the average value of welding voltage |
| If both the current and voltage are out of the range | : Difference of either value which is more largely out of the range than the other |

- P41 (Current tolerance (+))
  P42 (Current tolerance (-))
  P43 (Voltage tolerance (+))
  P44 (Voltage tolerance (-))
  Select the allowable tolerance range from 0 to 100 % in relation to the set values of welding current / voltage.

  Example: The "P41" to "P44" settings when the set value of welding current is 200A and that of welding voltage is 20 V.

  P41 (Current tolerance (+)) is set to "10" % (= 220A)
  P42 (Current tolerance (-)) is set to "20" % (= 160 A)
  P43 (Voltage tolerance (+)) is set to "20" % (= 24 V)
  P44 (Voltage tolerance (-)) is set to "10" % (= 18 V)

  In the example above, the allowable tolerance range of welding current is 160 to 220 A and that of welding voltage is 18 to 24 V.

- P45 (WARNING judgment time)
  Select the time to judge the event as an error in the range from 0 to 100 seconds when the average current/voltage (average per second) during welding is out of the allowable tolerance range.
  When the out-of-range state becomes longer than the time specified here, an alarm display. ( ☞ 7.2.2.7 Alarm indication at the time of WARNING detection (Welding Monitor "P45" "P46"))

  If "0" is set, WARNING detection will not be performed.

- P46 (Operation at the time of WARNING detection)
  Select the operation at the time of WARNING detection from 0 to 2.
  The set values and operations at the time of WARNING detection are as below.

| Set value | Operation |
|---|---|
| 0 | Alarm indication only. Welding can continue. (Continuous operation is possible) |
| 1 | The ongoing welding can continue.<br>After the welding is finished, next welding cannot start until any key of the operation panel is pressed.<br>(Continuous operation is not possible) |
| 2 | Welding stops immediately.<br>Next welding cannot start until any key of the operation panel is pressed. (Continuous operation is not possible) |

- Output the alarm signal
  When the average current or voltage becomes out of the allowable error ranges set in “P41” to “P44” during welding, the external output terminal with this function is closed.
  With one of the following operations, the external output terminal with this function is opened.
  1:Any panel key is pressed.
  2:Start welding(only when the value of “P 46” is “0”).
  3:The operation stop terminals open,and short-circuit.(Cancellation of operation stop)

### 7.2.2.5 Total operation time

Total operation time and total welding time are controlled according to the setting range.

- P50 (Cumulative total operation time)
  The operation time of welding power source is counted at all time and accumulated as total operation time.
  The setting range of count value is between 0 and 999 hours. The time between 0 and 99.9 hours are displayed in the unit of 0.1 hour and the time exceeding 100 hours is displayed in the unit of 1 hour. Refer to P52(Clear the control data) about how to clear the "P50".

- P51 (Cumulative total welding time)
  Every interval from the start of current flowing triggered by the torch switch ON to the stop of output triggered by the torch switch OFF is counted and accumulated as welding time.
  The setting range of count value is between 0 to 999 hours, The time between 0 and 99.9 hours are displayed in the unit of 0.1 hour and the time exceeding 100 hours is displayed in the unit of 1 hour. The count value of "P51" will not be cleared according to the "P32" setting. Refer to P52 (Clear the control data), about how to clear "P51".

- P52 (Clear the control data)
  Clear the various control data. After setting the setting value of P52 to "cLr", finish the "Welding Monitor" setting with pressing the " Welding Monitor" key for one second or more. Then, the control data shown below will be cleared.

  P10 (Cumulative Number of welding)
  P20 (Cumulative wire consumption used in welding)
  P30 (Cumulative total welding time)
  P50 (Cumulative total operation time)
  P51 (Cumulative total welding time)

### 7.2.2.6 Alarm indication when target is achieved

When any of the number of welding points, wire consumption and total welding time reaches the target specified, its corresponding control No. will flash.

- In the right example, the control No. "P20" flashes on the left digital meter and the specified value "910" on the right digital meter.
- The display returns to the normal state when any key of the operation panel is pressed.
- If continuous operation is enabled in the setting of the operation for the time when the target is achieved, an alarm will display every time welding finishes until any key of the operation panel is pressed.

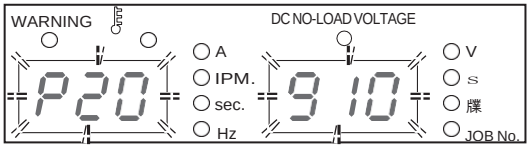


<Example> When wire consumption reached the target value

### 7.2.2.7 Alarm indication at the time of WARNING detection (Welding Monitor "P45" "P46")

If the average current or average voltage becomes out of the specified range, the difference between the average value and the specified value will flash.

- The right example shows a current error. The control No. "P40" flashes on the left digital meter and the difference between the average value and specified value "30" on the right digital meter, with the "A" LED lighting.

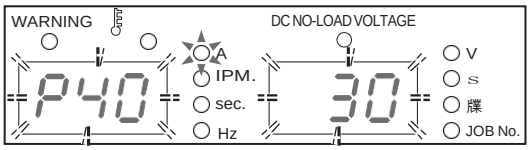


<Example> While welding is conducted with the welding current 200A/Current tolerance (+) 10% (= 220A), the average current during welding rose to 230A and the WARNING judgment time specified in "P45" elapsed.

- The right example shows a voltage error. The control No. "P40" flashes on the left digital meter and the difference between the average value and specified value "1.5" on the right digital meter, with the "A" LED lighting.
  In case of voltage error, the difference between the average voltage and specified voltage is displayed in one decimal place.
- The display returns to the normal state when any key of the operation panel is pressed.
- If continuous operation is disabled ("1" or "2" is selected) in the "P46" setting, next welding cannot start until any key of the operation panel is pressed.

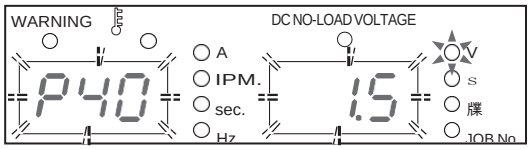


<Example> While welding is conducted with the welding voltage 15V/Voltage tolerance (+) 0% (= 15V), the average voltage during welding rose to 16.5V and the WARNING judgment time specified in "P45" elapsed.

# Chapter 8 Maintenance and Inspection

This chapter explains the daily and periodical inspection of the welding power source.

## 8.1 Precautions for Maintenance and Inspection

This section explains the precautions for maintenance and inspection work.

To prevent electric shock or burn injury, ensure to follow the instructions below:

**⚠ WARNING**

- **Do not touch the input and output terminals and the internal live electrical parts of the welding power source.**
- **Perform periodical maintenance and repair damaged parts if any before use.**
- **Maintenance, inspection and repair should be performed by qualified persons or persons familiar with the Welding power source.**
- **Before starting maintenance and inspection, make sure to cut the input power with the disconnect switch in the box connected with the welding power source and wait three minutes or more.**
  **The capacitors may be still charged even after the input power is cut. Make sure that there is no charged voltage before starting the work.**
- **During maintenance and inspection, take an appropriate measure to prevent turning on the input power.**
  **Special attention is necessary because the welding power source contains many parts connected to the input side due to its high-frequency inverter method.**
- **Periodically blow the parts of welding power source with dry compressed air to remove dust.**
  **Powder dust accumulating inside may cause insulation deterioration, resulting in electric shock or fire.**

**⚠ CAUTION**

- **Before maintenance and inspection, wait until the temperature inside the welding power source becomes low.**
  **The main circuit parts such as DC reactor and heat sink are hot just after welding. Touching them accidentally may cause burn injury.**

To prevent being caught/pinched by the rotating parts, ensure to follow the instructions below:

**⚠ WARNING**

- **Removing the cases for maintenance, inspection or repair should be performed by qualified persons or persons familiar with the Welding power source. Also put up a barrier around the Welding power source or take other necessary measure to prevent other people from getting in the nearby area.**
- **Keep your hands, fingers, hairs and clothes away from the rotating cooling fan and the open parts around the cooling fan;**

To prevent damage and problem of the welding power source and loss of the data, ensure to follow the instructions below:

**⚠ CAUTION**

- **The welding conditions (electronic data) stored by this function are susceptible to occurrence of static electricity, impact, repair, etc., and there is a possibility that the stored contents may be changed or lost. Important information should also be stored as printed document.**
  **Please note that Gedik Welding will not be liable for any alteration or loss of electronicinformation.**
- **When cleaning the welding power source, do not expose the cooling fan directly to compressed air.**
  **Otherwise powder dust may get inside the cooling fan. Also the cooling fan may rotate at high speed due to compressed air, resulting in wearing of the bearing.**
- **When using a vacuum cleaner to remove powder dust accumulating on the welding power source, do not vacuum between the rotating part of cooling fan and the main body.**
  **Otherwise lubricant of the bearing of cooling fan may also be removed, resulting in failure or shorter service life of the cooling fan.**

# 8.2 Daily Inspection

This section explains the daily inspection of the welding power source. Perform daily inspection for the following items in the table.

Front and rear panel of the welding power source is made from polycarbonate resin. To prevent from electric shock or fire caused by the damage on polycarbonate resin, ensure to follow the instructions below.

**⚠ WARNING**

- **Before performing daily inspection, refer to " 8.1 Precautions for Maintenance and Inspection.**
- **If there is dirt on plastic parts, soak a soft cloth in water, alcohol or neutral detergent, wring it well and wipe off the dirt.**
  **Do not use organic detergent or chemical agent. Doing so may cause crack (breaking) and degrade the strength.**
- **If there is any abnormality in the plastic parts such as front and rear panels, immediately stop the use and contact your dealer.**



| Daily inspection item | Content |
|---|---|
| Status of the grounding cable | • Check that the grounding terminal on the back of the welding power source is securely grounded. (If it is not grounded, electric shock/failure/malfunction may occur.) |
| Status of cables<br>(Primary power cable for facility side, cables for base metal side/torch side, torch cable, voltage detection cable, etc.) | • Check that there is no abnormal heat generation in cable connections.<br>• Check that cable connections are not loose.<br>• Check that there is no problem in the insulation method between the cables and base metal.<br>• Check that cables are not cut or damaged. |
| Appearance of the welding power source | • Check that there is no abnormality such as crack in plastic parts of the welding power source. |
| Noise/vibration/odor generated from the welding power source | • Check that there is no sound of metal, abnormal vibration or burnt odor inside the welding power source. |
| Status of the cooling fan | • Check that the cooling fan smoothly rotates when the power switch is turned on. (There should not be sound of metal, abnormal vibration or burnt odor.)<br>While the cooling fan is rotating, air is ventilated from the slits on the front and rear of the welding power source. |
| Status of the operation panel/torch switch | • Check that the keys on the operation panel and the torch switch work normally. |
| Status of the primary power voltage for facility side | • Check that there is not large fluctuation in the primary power voltage. |

# 8.3 Periodical Inspection

This section explains the periodical inspection of the welding power source. Check the items in the table below every three (3) to six (6) months.

**⚠ WARNING**

- **Before performing maintenance and inspection, read the instructions in "8.1 Precautions for Maintenance and Inspection" and "8.2 Daily Inspection".**

| Periodical inspection item | Inspection work |
|---|---|
| Grounding wire | |
| Each cables<br>(Primary power cable for facility side, cables for base metal side/torch side, torch cable, voltage detection cable, etc.) | • 8.2 Daily Inspection Refer to the description for the same item in "8.2 Daily Inspection". |
| Welding torch | • Check that there is no deterioration, damage or other abnormality in consumable parts of the welding torch. Abnormality in consumable parts can prevent smooth wire introduction. |
| Cleaning inside the welding power source | • Blow with dry compressed air from the front slit (ventilation hole) to the back side to remove dust inside the welding power source.<br>Dust accumulating on the heat sink of transistor and rectifier may prevent heat radiation, adversely affecting the transistor. Also, accumulation of dusts between the winding of transducer could deteriorate insulation.<br> 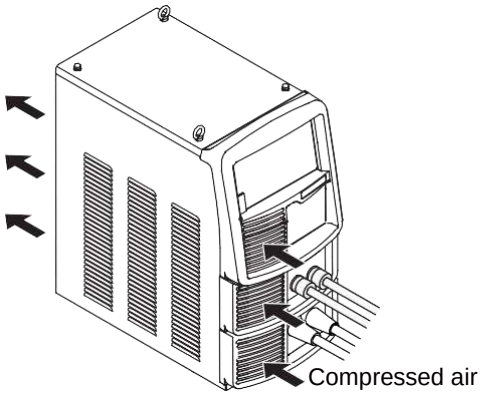 <br> |
| Cleaning inside the welding power source<br>(When an abnormal temperature error code is displayed) | • Dust accumulating on the fin or winding of heat sink can cause insufficient heat radiation.<br>Remove the left side panel and fan frame and check the the dirt inside. If there is heavy dirt, blow the fin and coils of heat sink directly with compressed air to remove dust inside.<br> 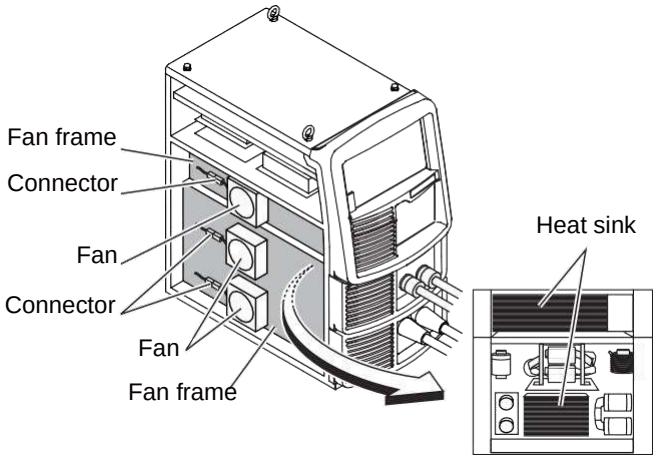 <br> |

# 8.4 Periodical Replacement Parts

This section explains the parts to be replaced periodically.

- Printed circuit board PCB7 (☞ 10.1 Parts List)
  The printed circuit board PCB7 inside the welding power source has a high voltage electrolysis capacitor. The high voltage electrolysis capacitor supplies stable direct current to the inverter circuit, but its performance will degrade year by year.

  If the printed circuit board PCB7 is used for an extended period without being replaced, it may result in performance degradation of the welding power source and damage of the high voltage electrolysis capacitor or other parts.
  It is recommended to replace the printed circuit board PCB7 every five years.

  For replacement of the printed circuit board PCB7, contact your dealer.

  **⚠ CAUTION**

  - **Even if the part is replaced by the user, please contact your dealer.**
  - **When inserting the connector to the printed circuit board, check that the number printed on the printed circuit board is the same as the number indicated on the connector, and insert firmly to the end.**
  - **Do not turn on the power switch of welding power source when the connector of printed circuit board is disconnected.**

- Others
  Fan, relay, and rated power supply has a certain lifetime; they are recommended to be replaced once in approximately five years.
  When replacement of fan, relay, and rated power supply is necessary, please contact your dealer.

# 8.5 Insulation Resistance Measurement and Withstand Voltage Test

If insulation resistance measurement and withstand voltage test is necessary, please contact your dealer.

**⚠ WARNING**

- **The customer MUST NOT perform the withstand voltage test. If withstand voltage test is necessary, ensure to contact your dealer.**
- **Insulation resistance measurement should be conducted by qualified persons or persons familiar with the welding machine. Also, fence and other neccessary measures should be taken around the welding machine to prevent other people from getting in the nearby area.**

**⚠ CAUTION**

- **Conducting insulation resistance measurement by customer may result in injury or equipment failure. For insulation resistance measurement, be sure to ask your dealer.**

- When measuring insulation resistance and testing withstand voltage, follow the steps below.
  Refer to the schematic diagram, parts layout, and parts list for maintenance.
  - Disconnect the input power cable and grounding cable from the disconnect switch and short-circuit the input terminal.

- Short-circuit the positive (+) and the negative ( - ) sides of the output terminal.
- Unground all the case grounding cables (line No.80) and insulate them with insulation tape.
- For DR1 short-circuit the AC side and positive (+) output side and the AC side and negative ( - ) output side respectively.
- Short-circuit between TR1(C1)-(C2E1), TR2(C2E1)-(E2), TR3(C1)-(C2E1), TR4(C2E1)-(E2) .
- For DR2,6, short-circuit between the anode and the cathode.
- Short-circuit between TR5 (C1) - (E1C2), and TR5 (E1C2) - TR5 (E2).
- Short-circuit both ends of L2.
- Apply NF.
- After finishing insulation resistance measurement, return the above to the original state.

**⚠ CAUTION**

- **After finishing insulation resistance measurement, it is necessary to remove the shortcircuit cables and return the welding power source to the original state.**
  **If the power is turned on without returning it to the original state, the welding power source will burn out.**

# Chapter 9 Troubleshooting

This chapter explains the typical troubleshooting for the welding power source.

The cause of problems can be categorized as below:

- Mechanical problems (e.g., problems of driving mechanism of the wire feeder)
- Electric and control problems
- Operational errors

A problem may become complicated as a result of mix of multiple causes. If a problem has occurred in the welding power source, it is necessary to identify its cause and address it appropriately.

For question concerning problems, contact your dealer.

## 9.1 Action in Case of Error

This section explains the causes of abnormalities and how to cope with them in case of lighting/flashing of the "WARNING" LED and "Temperature WARNING" LED on the operation panel.
If any error occurs in the welding power source, the operation panel will indicate it as below:

- The "WARNING" LED and the "Temperature WARNING" LED light/flash
- An error code flashes on the left/right digital meters

The welding power source may stop or may not stop output depending on the type of error code. The meanings of (*1) and (*2) in the table below are as follows.

- *1: When the error occurs, the welding power source stops the output.
- *2: Even when the error occurs, the welding power source does not stop the output. To stop the output, set the internal function F19 to "ON". (☞ 6.7.1 Setting procedure)
  Details on the internal function F19 (☞ 6.7.2.13 F19: Switching alarm setting)

Check the error code displayed and take an appropriate action according to the table below.
(If the welding power source is combined with robots manufactured by Gedik Welding, see the instruction manualof the robot controller.)

**⚠ WARNING**

- **Before inspecting the welding power source, make sure to read "8.1 Precautions for Maintenance and Inspection".**

**⚠ CAUTION**

- **If an error code not listed in the table is displayed, write it down on paper, turn off the power switch and contact your dealer.**
  **Do not turn on the power switch because it may indicate a serious problem of the welding power source.**

| Error code | | Error cause | Action and how to cancel error |
|---|---|---|---|
| E- | 000 | There is no load between the STOP terminals (*1) | • Identify the cause of no load between the STOP terminals (3-4) of the terminal block TM3 for external connection.<br>• How to clear the error code indication differs depending on the setting of internal function F4. (☞ 6.7.2.2 F4: Auto/Semi-auto mode) |

| Error code | | Error cause | Action and how to cancel error |
|---|---|---|---|
| E- | 010 | The torch switch was on when the power switch was turned on (*1) | • Check that the torch switch is not on (not pressed).<br>• If the internal functions F29 to F32 are set to "4" (activate), check also the connections of the terminal blocks for external connection. (☞ 6.7.2.20 F29 to F32: External input terminal setting)<br>• The error code will disappear when the status above is resolved. |
| E- | 020 | Inching was active when the power switch was turned on (*1) | • Check that the INCHING key (or inching button) is not pressed.<br>• If the internal functions F29 to F32 are set to "2" (inching), check also the connections of the terminal blocks for external connection. (☞ 6.7.2.20 F29 to F32: External input terminal setting)<br>• The error code will disappear when the status above is resolved. |
| E- | 030 to 037 | Installing the software from a USB flash drive failed (*1) | • Check that the USB flash drive is normal and connected to the USB connector correctly, and try installing again.<br>• The error code will disappear when the power switch is turned off. |
| E- | 100 | Error of control power (*1) | • If cables are drawn out of the welding power source, check that there is no abnormality (e.g., short-circuit) in the cables.<br>• The error code will disappear when the power switch is turned off. |
| E- | 150 | The input voltage for primary side exceeded the allowable range (*1) | • Check that the input voltage for primary side is between 414 to 506 V.<br>• The error code will disappear when the power switch is turned off. |
| E- | 160 | The input voltage for primary side fell below the allowable range (*2) | • Check that the input voltage for primary side is between 414 to 506 V.<br>• Check the set value of internal function F20. (☞ 6.7.2.14 F20: Low input voltage detection level)<br>• The error code will disappear when the power switch is turned off. |
| E- | 210 | The arc voltage was not detected (*1) | • Check that the power cables such as cables for base metal side and torch side and the voltage detection cable are not disconnected.<br>• The error code will disappear when the power switch is turned off. |
| E- | 300 to 303 | The temperature inside the welding power source exceeded the allowable range (*1) | • Leave it untouched (with the power on) and operate the cooling fan for 10 minutes or more, and then turn off the power.<br>• After the above, clean dusts inside the welding power source. (☞ 8.3 Periodical Inspection)<br>• The error code will disappear when the power switch is turned off.<br>• After recovery, be careful not to exceed the rated duty cycle. |
| E- | 310 to 313 | Rotation problem of the cooling fan (*2) | • Clean dusts inside the welding power source. (☞ 8.3 Periodical Inspection) (Cooling fan may not work normally due to powder dust or foreign matter.)<br>• If the problem persists, the cooling fan may be broken. Contact your dealer.<br>• The error code will disappear when any key of the operation panel is pressed. |
| E- | 500 | Lack of water pressure (*1) | • Check for water leakage from the cooling water hose and ensure that sufficient cooling water is available.<br>When using the air-cooled torch, check that LED of the TORCH key on the operation panel is off. |
| E- | 615 | Error of the backup memory data (*2) | • The error code will disappear when any key of the operation panel is pressed.<br>• At the time, the welding conditions specified/registered and the settings of internal functions may be initialized. After the error is cleared, check that there is no problem in the data. |
| E- | 700 | An over current was detected at the output side of the welding power source (*1) | • Check that the chip at the end of torch is not contacting the base metal.<br>• Check that the power cables such as cables for base metal side and torch side are not short-circuited.<br>• The error code will disappear when the power switch is turned off. |

| Error code | | Error cause | Action and how to cancel error |
|---|---|---|---|
| E- | 710 | The phase W of input voltage for primary side is not connected (*1) | • Check that there is no problem in input voltage for primary side and in cable wiring.<br>• The error code will disappear when the power switch is turned off. |
| E- | 751 | The temperature of the reignition control circuit has exceeded the allowable range. The surge pressure of the secondary side switch has exceeded the allowable level. | • Leave it untouched (with the power on) and operate the cooling fan for 10 minutes or more, and then turn off the power.<br>• Avoid using an extension cable unnecessarily. Refer to “4.2.4.1 Caution on connection of voltage detection cable”. |
| E- | 800<br>801 | The rotation rate of the motor of wire feeder was not detected (*1) | • Check that there is no disconnection, short-circuit or other abnormalities in the cables connecting the wire feeder.<br>• Check that there is no problem in the wire feeder.<br>• The error code will disappear when the power switch is turned off. |
| E- | 810 | The temperature of the governor circuit exceeded the allowable range (*1) | • Check that the wires are not stuck or there are no other abnormalities in the welding torch or wire feeder.<br>• The error code will disappear when the power switch is turned off.<br>• The "E-820" indication will disappear when any key of the operation panel is pressed. |
| E- | 820 | The current in the wire feeder motor exceeded the warning level (*2) | |
| E- | 830 | The current in the wire feeder motor exceeded the WARNING detection level (*1) | |
| E- | 951 | There is a duplicate ID on a single bus (*1) | • Turn off the power switches of all other CAN-connected welding power sources, then turn on the power switches and check the setting of internal function F43. (☞ 6.7.2.24 F43: CAN ID)<br>• The error code will disappear when the power switch is turned off. |

# 9.2 Troubleshooting

This section explains the typical problems other than the error codes, their causes, and how to cope with them.
Check the table below before requesting repair service.

**⚠ WARNING**

- **Before inspecting the welding power source, make sure to read "8.1 Precautions for Maintenance and Inspection".**

| No. | Problem | Possible cause | Corrective action |
|---|---|---|---|
| 1 | The power switch has tripped. | Leak has occurred in the welding power source. | DO NOT turn on the power switch. Contact your dealer. |
| 2 | The power LED switch does not light even when the power switch is turned on. | The primary power source is not supplied. | Supply the primary power source between 414 to 506 V. |
| 3 | Nothing is displayed on the left/ right digital meters even when the power switch is turned on. | | |
| 4 | "Temperature WARNING" LED lights and an error code is displayed when the power switch is turned on. | The protection circuit has been activated due to temperature error. | Leave it untouched (with the power on) and operate the cooling fan for 10 minutes or more, and then turn off the power.<br>After the above, clean dusts inside the welding power source. (☞ 8.3 Periodical Inspection) |
| 5 | Shielding gas is not flowing. | The valve of gas cylinder is closed. | Open the gas valve. |
| | | The pressure of gas cylinder is insufficient. | Replace the gas cylinder. |
| | | Setting/handling of the external inputs is not correct. | Check that the setting of internal functions F29 to F32 is correct. (☞ 6.7.2.20 F29 to F32: External input terminal setting) |
| | | The external input cables are disconnected/short-circuited. | Check that there is no abnormality in the cables connected to the external input terminal block. If any, repair/replace the cables. |
| 6 | Shielding gas does not stop flowing. | Setting/handling of the external inputs is not correct. | Check that the setting of internal functions F29 to F32 is correct. (☞ 6.7.2.20 F29 to F32: External input terminal setting) |
| | | The external input cables are disconnected/short-circuited. | Check that there is no abnormality in the cables connected to the external input terminal block. If any, repair/replace the cables. |
| 7 | Arc does not generate even when the setting of welding conditions is correct. (w/o no-load voltage) | Connection of the torch cable is loose. | Securely connect the torch cable. |
| | | The torch switch is broken. | Check that the torch switch works normally. |
| 8 | Setting of current/voltage is not possible. | The automatic machine mode is selected. | Check that the setting of internal functions F4 is correct. (☞ 6.7.2.2 F4: Auto/Semi-auto mode) |
| | | An analog remote control (optional) is connected. | When an analog remote control (optional) is connected, the setting of the remote control has priority. |
| | | The encoder is broken. | The printed circuit board PCB2 (P30086R00) needs to be replaced. Contact your dealer. |
| 9 | The mode does not change even when the CRATER-FILL key is pressed. (The LED position does not change.) | The internal function F4, F48 or F51 is set to "ON". | Turn the settings to "OFF". |

| No. | Problem | Possible cause | Corrective action |
|---|---|---|---|
| 10 | The welding conditions cannot be set with the operation panel. The welding mode does not change even when switched with the operation panel. | The erroneous prevention function to prevent malfunction of the operation panel is enabled. (Erroneous operation prevention function) | Press and hold the ENTER key three seconds or more to disable the erroneous operation prevention function the operation panel. |
| 11 | Arc is unstable. | The setting of welding mode is not correct. | Check the settings of wire diameter, wire materials and shielding gas. |
| | | The wire is defective or there is a failure in wire feeding. | Check that there is no problem in the wire or wire feeder. (☞ 5.2 Check before Welding) |
| | | Connection of the voltage detection cable is not correct. | Check that connection of the voltage detection cable is correct. |
| | | There is noise in the voltage detection cable. | Adjust the arc characteristics to the plus side. |
| | | P.C.B. P30205S is failed. | Contact your dealer. |
| 12 | Wire is not fed (no error code is displayed). | The pressure roll of wire feeder came off. | Set correctly the pressure roll of wire feeder. (For setting, see the instruction manual of the wire feeder.) |
| | | There is an abnormality in cables of the wire feeder. | Check that there is no abnormality in cables of the wire feeder. |
| 13 | There are blowholes. | There is a problem in the shielding gas. | Check that there is no abnormality in the gas cylinder or gas hose. |
| | | The chip of the welding torch wore out. | Replace the chip. |
| 14 | Continuous output of the WCR signal is shown on the monitor of the robot. (The WCR signal is used for communicating with the robot to check the presence of the welding current.) | The WCR relay of welding power source is broken. | The WCR relay on the printed circuit board PCB1 (P30099P00) needs to be replaced. Contact your dealer. |
| 15 | The password is lost. | - | Contact your dealer. |

# Chapter 10 Reference Materials

This chapter contains the parts list of welding power source, and reference materials for setting the welding conditions.

## 10.1 Parts List

This section shows the parts list of welding power source.

- **When placing an order, provide your dealer with the necessary information: the model name of welding power source, the name of the part to be replaced, and the part number (or specifications if part has no number).**

  **The period of supplying parts will be at the shortest approximately seven years after the welding power source is manufactured. It may change, however, if the parts from other companies cannot be supplied.**

- **The codes in the table correspond to those in the schematic diagram/parts layout drawing.**

| Code | Part No. | Product Name | Specifications | Q'ty | Remarks |
|---|---|---|---|---|---|
| NF | 100-1568 | Circuit protector | CA3-B0-24-640-41D-C | 1 | |
| PL1 | 100-0171 | Pilot lamp | N46010A7KW-01 ROHS | 1 | |
| DR1 | 100-1938 | Diode module | PGH150N16 | 1 | |
| DR2 to 9 | 4531-119 | Diode module | DSEI 2X101-06A | 8 | |
| DR10,11 | 4531-119 | Diode module | DSEI 2X101-06A | 2 | |
| DR12 | 4531-119 | Diode module | DSEI 2X101-06A | 1 | |
| DR15 | 4531-120 | Diode | D5SB60 | 1 | |
| DR19,20 | 4531-119 | Diode module | DSEI 2X101-06A | 2 | |
| DR21,22 | 100-2373 | Diode module | DSEI 2X101-12A | 2 | |
| TR1 to 4 | 100-1750 | IGBT module | CM300DU-12NFH | 4 | |
| TR5 to 8 | 4534-531 | IGBT module | CM400DY-12NF | 4 | |
| TR11 | 100-2033 | IGBT module | FZ600R12KP4 | 1 | |
| TR12 | 4534-402 | IGBT | 1MBH50D-060 | 1 | |
| CT1 | 4810-030 | Current transformer | W-W03029A ROHS | 1 | |
| CT2 | 100-0956 | Hall current detector | CS-40GEH | 1 | |
| T1 | P30205B00 | Inverter transformer | P30205B00 | 1 | |
| T2 | W-W03674 | Auxiliary transformer | W-W03674 | 1 | |
| L1 | P30205L00 | Input reactor | P30205L00 | 1 | |
| L2 | P30205C00 | DC reactor | P30205C00 | 1 | |
| L3 | 100-0618 | Ferrite core | HM2AT4815 | 1 | |
| | 100-1950 | Ferrite core | TW70W(R402715) | 1 | |
| L4,5 | 4739-543 | Ferrite core | E04RA310190100 | 2 | |
| L6 | 100-0620 | Ferrite core | SN-20 OR23.5×9 5×12.6 | 2 | |
| THP1 | 4614-057 | Thermostat | 67L080 | 1 | |
| THP2 | 4614-051 | Thermostat | 67L090 | 1 | |
| THP3 | | Thermostat | US602AXTTL 130 ℃ | 1 | |
| THP4 | | Thermostat | US602AXTTL 100 ℃ | 1 | |
| FM1 to 3 | 100-1429 | FAN | 9WV1224P1H003 | 3 | |
| FM4 | 100-1825 | FAN | 9G1224E1D07 | 1 | |
| SH | 4403-132 | Meter shunt | SH 600A/60mV | 1 | |
| R1 to 3 | 6100-052 | Surge absorber | TND14V-911KB0LLAA0 | 3 | |
| R5 to 10 | 100-0234 | Carbon resistor | RD20S 1KΩJ | 6 | TR1 to 4 |
| R12,13 | 100-1430 | Metal film resistor | RPM200Z 5Ω | 2 | |
| R18 | 100-0662 | Thermistor | EC2F103A2-40113 | 1 | |
| R19a,b | 100-1432 | Winding resistor | FH50 471J/RO | 2 | |
| R20,21 | 100-0234 | Carbon resistor | RD20S 1KΩJ | 2 | TR3,4 |
| R22 | 100-1571 | Winding resistor | CS1P 100ΩJ | 1 | |

| Code | Part No. | Product Name | Specifications | Q'ty | Remarks |
|---|---|---|---|---|---|
| R23 | 4509-918 | Cement resistor | 40SH 200ΩJ | 1 | |
| R24 | 4509-704 | Carbon resistor | RD1/4W 1kΩJ | 1 | |
| R28,29 | 100-1949 | Fixed metal oxide film resistor | MOS1CT52A104J | 2 | |
| R33,34 | | Cement resistor | RH220 10ΩJ | 2 | |
| R35 | 4509-704 | Carbon resistor | RD1/4W 1kΩJ | 1 | TR12 |
| R36 | 100-1430 | Metal film resistor | RPM200Z 5Ω | 1 | |
| R43 | 4508-317 | Carbon resistor | RD1/2S 3kΩJ | 1 | TR11 |
| R50 to 57 | 4508-317 | Carbon resistor | RD1/2S 3kΩJ | 8 | TR5 to 8 |
| R65 | 4509-109 | Fixed metal oxide film resistor | RS1B 51kΩ | 1 | |
| R66,67 | 100-1430 | Metal film resistor | RPM200Z 5Ω | 2 | |
| C1 to 4 | 100-1433 | Ceramic capacitor | DEBE33D222ZA2B | 4 | |
| C7 | 4518-526 | Film capacitor | EM351200D0BA1HP | 1 | |
| C8 | | Film capacitor | FHC(180)2000V223J | 1 | |
| C9 | 100-1572 | Film capacitor | FHC(180)2000V103J | 1 | |
| C10 | 100-0227 | Film capacitor | 0.47μF 50V | 1 | |
| C12,13 | 100-1871 | Film capacitor | US20X223JBASA | 2 | |
| C23 to 26 | | Film capacitor | US63Y224JAASA | 4 | |
| CON1 | 100-1435 | Receptacle | DPC25-10BP | 1 | |
| CON2 | 4730-010 | Receptacle | DPC25-6BP | 1 | |
| PS1 | 4255-016 | Pressure switch | W-W00032B | 1 | |
| TM5 | 4739-141 | Terminal board | T-3 (Black) | 1 | |
| TM6 | 100-2228 | Terminal | DSTB22-04 | 1 | |
| DCV1 | K5791B00 | Power supply | K5791B00 | 1 | |
| DCV2 | K5791C00 | Power supply | K5791C00 | 1 | |
| PCB1 | P30205P00 | Printed circuit board | P30205P00 | 1 | (*1) |
| | 4341-206 | Relay | G6A-274P DC24V | 1 | With PCB1 |
| PCB2 | P30086R00 | Printed circuit board | P30086R00 | 1 | FRONT PANEL |
| | 100-1421 | Encoder | EVEGA1F2524B | 1 | With PCB2 |
| PCB3 | P30086Q00 | Printed circuit board | P30086Q00 | 1 | |
| PCB4 | P30087Q00 | Printed circuit board | P30087Q00 | 1 | |
| PCB5 | P30086V00 | Printed circuit board | P30086V00 | 1 | |
| PCB6 | P30086V00 | Printed circuit board | P30086V00 | 1 | |
| PCB7 | P30205M00 | Printed circuit board | P30205M00 | 1 | |
| PCB8 | P30086T00 | Printed circuit board | P30086T00 | 1 | |
| PCB9 | P30087T00 | Printed circuit board | P30087T00 | 1 | |
| PCB10 | P30086S00 | Printed circuit board | P30086S00 | 1 | REAR PANEL |
| PCB11 | P30205V00 | Printed circuit board | P30205V00 | 1 | |
| PCB12 | P30205S00 | Printed circuit board | P30205S00 | 1 | |
| (1) | P30086G01 | Mold cover | P30086G01 | 1 | Under side cover |
| (2) | P30086G02 | Mold cover | P30086G02 | 2 | Under side cover |
| (3) | P30206W02 | Operation panel sheet | P30206W02 | 1 | |
| (4) | W-W03636 | Cap | W-W03636 | 1 | For P30086G01 |
| (5) | 4734-007 | Output terminal | DIX BE 50/70 | 2 | |
| (6) | 100-1736 | Handle cover | 899-35054-001 W-W03829 | 1 | For NF |
| (7) | 4739-476 | Cap | W-W02814 | 2 | For CON1,2 |
| (8) | 4735-038 | Knob | K-100 22RSB | 1 | Parameter |
| (9) | 4735-039 | Cap | K-100 22CSBL | 1 | Adjustment knob |
| (10) | 100-2755 | Fixed type caster | 420R-C65 | 2 | |
| (11) | 100-2756 | Free type caster | 420G-C65 | 2 | |

*1: When placing an order of a printed circuit board P30205P00, provide us the software version No. shown on the indication panel (under the input terminal block) at the rear of the welding power source.

# 10.2 Reference Drawing

This section contains the schematic diagram and the parts layout drawing of the welding power source.

## 10.2.1 Schematic diagram

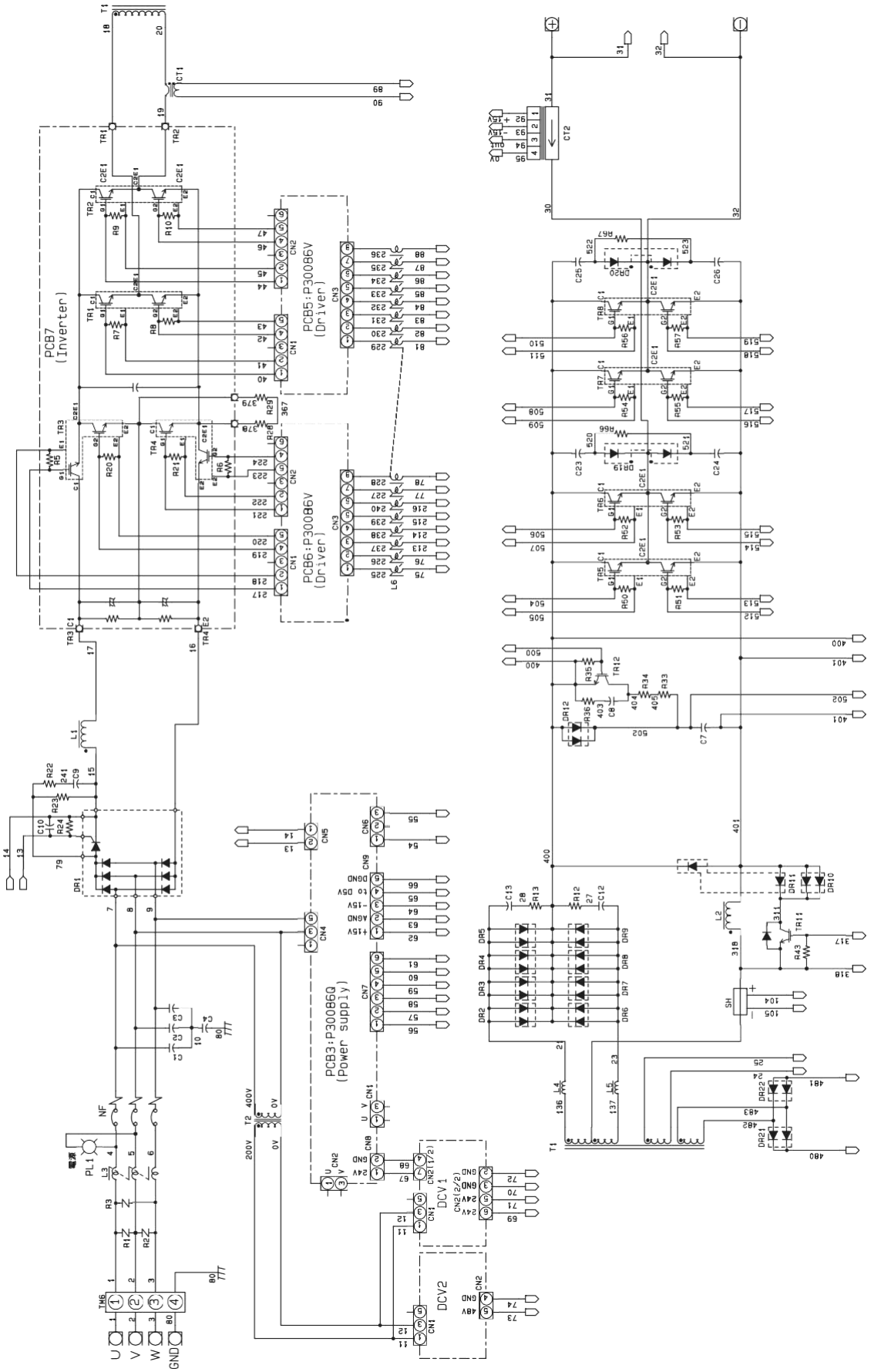

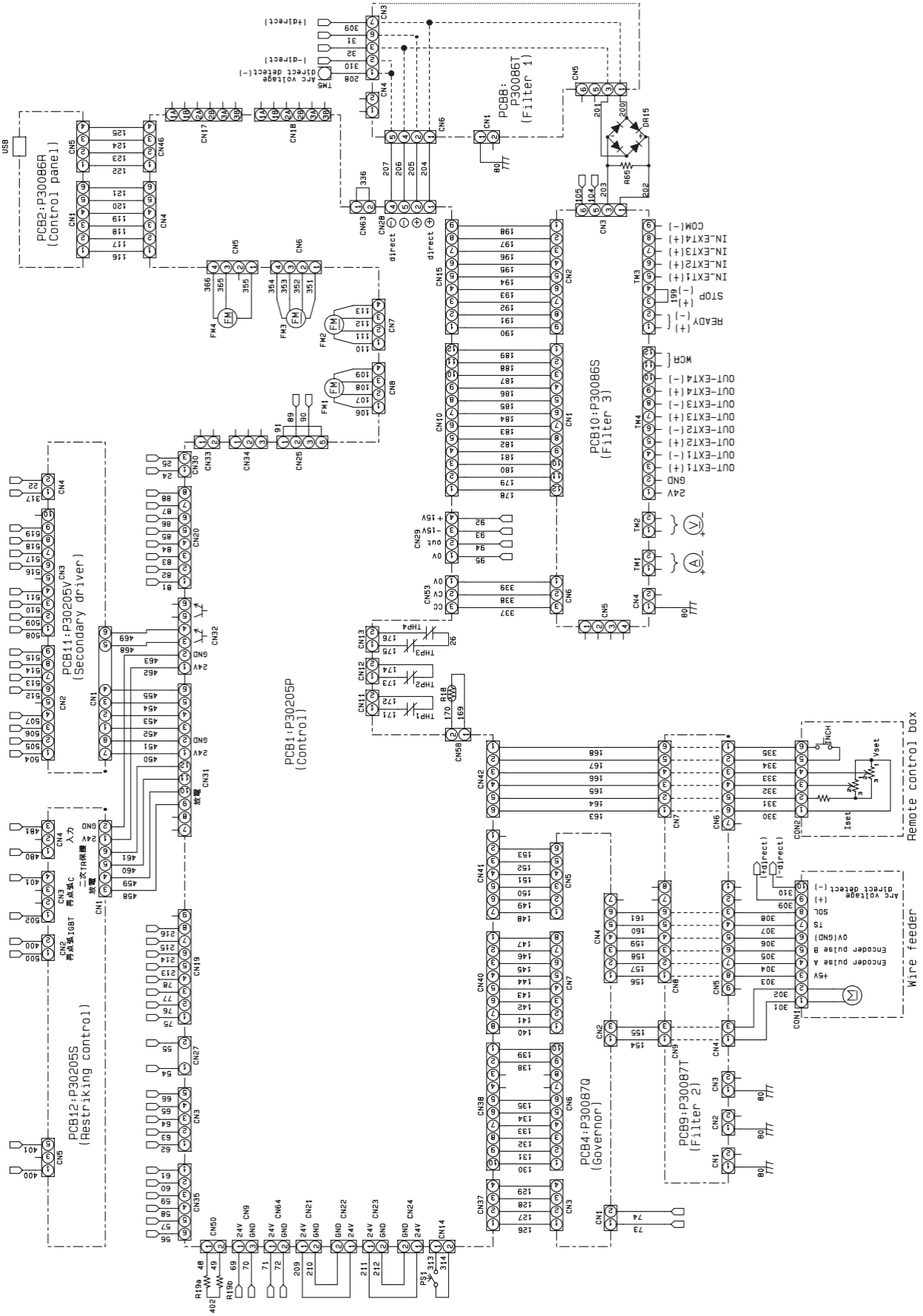
PCB2:P30086R
(Control panel)
PCB8:
P30086T
(Filter 1)
PCB10:P30086S
(Filter 3)
PCB11:P30205V
(Secondary driver)
PCB1:P30205P
(Control)
PCB12:P30205S
(Restriking control)
PCB4:P30087Q
(Governor)
PCB9:P30087T
(Filter 2)
Remote control box
Wire feeder

## 10.2.2 Parts layout drawing

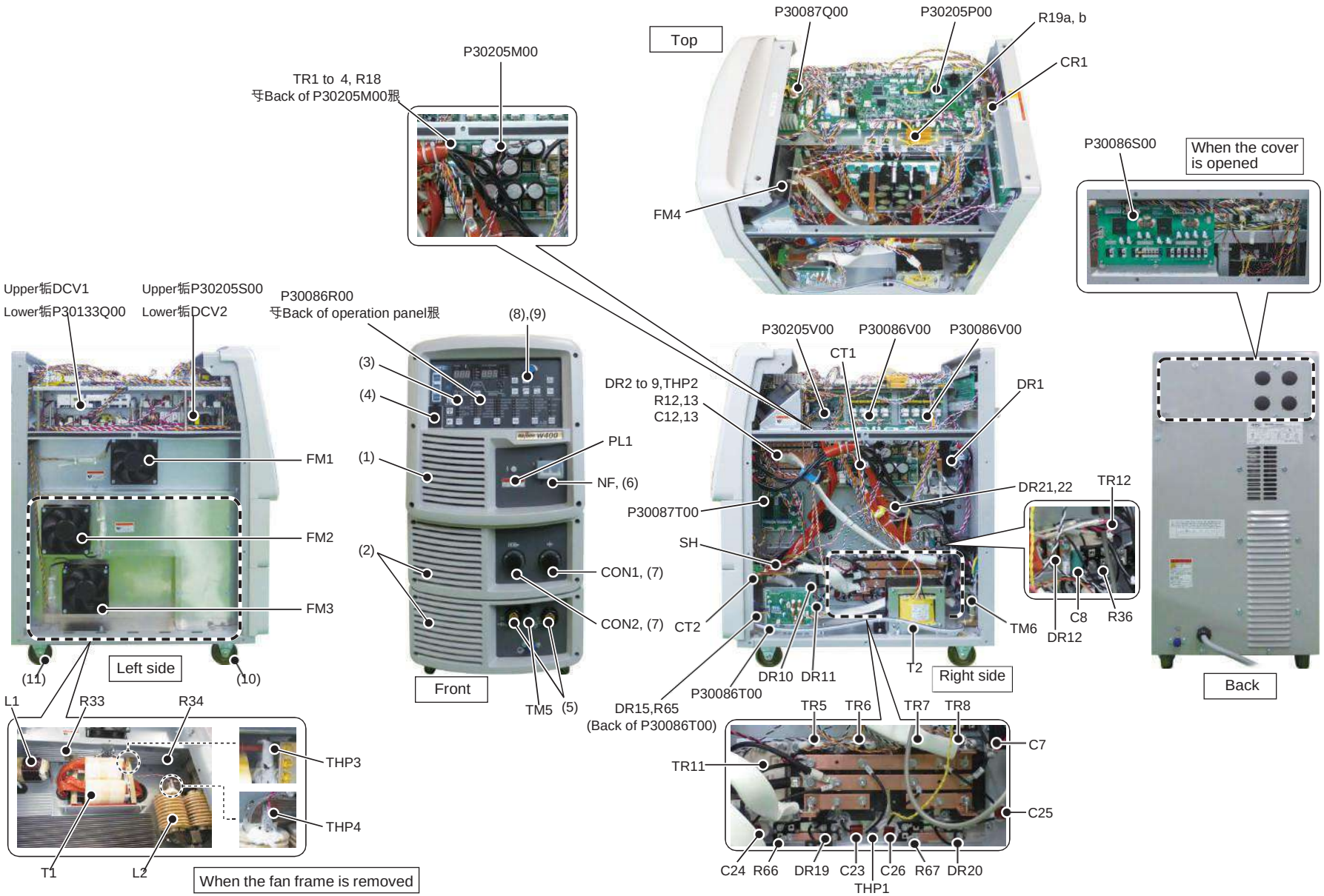

# 10.3 Materials for Setting Welding Conditions

This section provides reference information for setting the welding conditions.

## 10.3.1 Guide for changing welding conditions

This section gives examples of the problems that can occur due to improper welding conditions.

| Problem | Symptom |
|---|---|
| The wire feeding length is too long. | • The arc length becomes long.<br>• The bead width becomes wide.<br>• Shielding becomes poor. |
| The wire feeding length is too short. | • The arc length becomes short.<br>• Spatter is generated. |
| The welding voltage is too high. | • The arc length becomes long.<br>• The bead width becomes wide.<br>• Penetration and bead become small. |
| The welding voltage is too low. | • The wire contacts the base metal and spatter is generated.<br>• The bead width becomes narrow. |
| The welding current is too high. | • The bead width becomes wide.<br>• Penetration and bead become large. |
| The travel speed is too high. | • The bead width becomes narrow.<br>• Penetration and bead become small. |

## 10.3.2 Samples of welding condition settings

This section provides samples of common welding condition settings.
The values are for reference purpose. Adjust them according to the shape of actual weld zone and position of welding.

### 10.3.2.1 Example of MAG short arc welding

Material: Mild steel
Gas: Ar + $CO_2$ mixed gas (10 to 15 L/min)

| Joint shape | Plate thickness t [in. (mm)] | Wire diameter [in. (mm) Φ] | Gap [in. (mm)] | Current (A) | Voltage (V) | Travel speed [IPM (cm/min)] |
|---|---|---|---|---|---|---|
| Butt joint | 19.5 ga. (1.0) | .030 to .040 (0.8 to 1.0) | 0 | 50 to 55 | 13 to 15 | 16 to 22 (40 to 55) |
| | 18 ga. (1.2) | .030 to .040 (0.8 to 1.0) | 0 | 60 to 70 | 14 to 16 | 12 to 20 (30 to 50) |
| | 16 ga. (1.6) | .030 to .040 (0.8 to 1.0) | 0 | 100 to 110 | 16 to 17 | 16 to 24 (40 to 60) |
| | 12 ga. (2.3) | .035 to .045 (0.9 to 1.2) | 0 to 0 (0 to 1.0) | 110 to 120 | 17 to 18 | 12 to 22 (30 to 40) |
| | 1/8 (3.2) | .035 to .045 (0.9 to 1.2) | 0 to 0.1 (1.0 to 1.5) | 120 to 140 | 17 to 19 | 10 to 12 (25 to 30) |
| | 5/32 (4.0) | .035 to .045 (0.9 to 1.2) | 0.1 to 0.1 (1.5 to 2.0) | 150 to 170 | 18 to 21 | 10 to 16 (25 to 40) |

### 10.3.2.2 Example for welding conditions of pulse MAG

Example for welding conditions of horizontal fillet

| Plate thickness t [in. (mm)] | Leg length [in. (mm)] | Aim angle and position | Number of layers | Current (A) | Voltage (V) | Travel speed [IPM (cm/min)] |
|---|---|---|---|---|---|---|
| 1/8 (3.2) | 0.1 to 0.2 (3 to 4) | 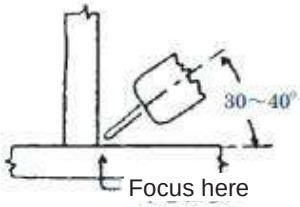 | 1 | 150 | 26 to 27 | 24 (60) |
| 11/64 (4.5) | 0.2 (5) | | 1 | 170 | 26 to 27 | 16 (40) |
| 15/64 (6.0) | 0.2 (6) | | 1 | 200 | 27 to 28 | 16 (40) |
| 5/16 (8.0) | 0.3 (8) | 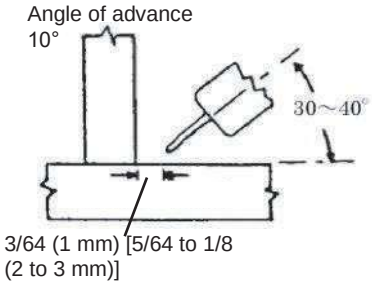 | 1 | 250 | 29 to 30 | 14 (35) |
| 15/32 (12.0) | 0.4 (10) | 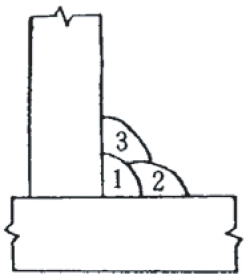 | 1 | 180 to 200 | 25 to 27 | 18 (45) |
| | | | 2 | 180 to 200 | 25 to 28 | 18 (45) |
| | | | 3 | 180 to 200 | 25 to 28 | 18 (45) |
| 5/8 (16.0) | 0.5 (12) | | 1 | 220 to 230 | 25 to 28 | 18 (45) |
| | | | 2 | 220 to 230 | 25 to 28 | 18 (45) |
| | | | 3 | 210 to 220 | 25 to 28 | 18 (45) |

Example for welding conditions of downward welding

| Plate thickness t [in. (mm)] | Shape of joint weld | Current (A) | Voltage (V) | Travel speed [IPM (cm/min)] | Remarks |
|---|---|---|---|---|---|
| 12 ga (2.3) | Butt | 100 | 22 to 23 | 28 (70) | Check back bead appearance |
| 1/8 (3.2) | Fillet | 100 | 21 to 22 | 28 (70) | Leg length: 0.2 to 0.2 in. (4 to 5mm), Throat depth: 0.1 in. (2.5mm)<br>Leg length: 0.4 in. (10 mm) |

Example for welding conditions of upward welding

| Plate thickness t [in. (mm)] | Shape of joint weld | Current (A) | Voltage (V) | Remarks |
|---|---|---|---|---|
| 15/32 (12) | 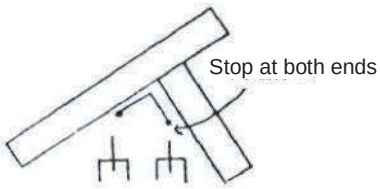 | 100 to 110 | 20 to 21 | Weaving<br>Leg length: 0.4 in. (10 mm) |

Example for both side welding conditions of downward butt welding (STANDARD mode)

| Plate thickness t [in. (mm)] | Bevel shape | Number of layers | Current (A) | Voltage (V) | Travel speed [IPM (cm/min)] |
|---|---|---|---|---|---|
| 15/64 (6.0) | | 1 | 170 | 25 to 26 | 12 (30) |
| | | 2 | 180 | 26 to 27 | 12 (30) |
| 23/64 (9.0) | 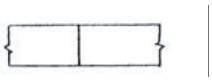 | 1 | 270 | 29 to 30 | 12 (30) |
| | | 2 | 290 | 30 to 31 | 12 (30) |
| 15/32 (12.0) | 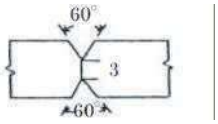 | 1 | 280 | 30 to 31 | 16 (40) |
| | | 2 | 330 | 33 to 34 | 16 (40) |
| 3/4 (19.0) | 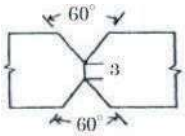 | 1 | 300 | 31 to 32 | 18 (45) |
| | | 2 | 300 | 31 to 32 | 18 (45) |
| | | 1 | 340 | 32 to 33 | 18 (45) |
| | | 2 | 280 | 30 to 31 | 18 (45) |
| 63/64 (25.0) | 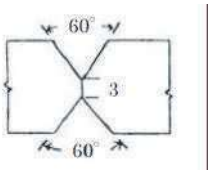 | 1 | 300 | 31 to 32 | 18 (45) |
| | | 2 | 320 | 32 to 33 | 18 (45) |
| | | 3 | 320 | 32 to 33 | 18 (45) |
| | | 1 | 340 | 32 to 33 | 18 (45) |
| | | 2 | 320 | 32 to 33 | 18 (45) |
| | | 3 | 320 | 32 to 33 | 18 (45) |

Example for welding conditions of single side welding (HIGH mode)

| Plate thickness t [in. (mm)] | Bevel shape | Number of layers | Current (A) | Voltage (V) | Travel speed [IPM (cm/min)] |
|---|---|---|---|---|---|
| 1/8 (3.2) | 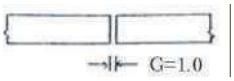 | 1 | 140 | 24 to 25 | 20 (50) |
| 15/64 (6.0) | 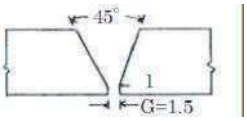 | 1 | 130 | 23 to 24 | 10 (25) |
| | | 2 | 150 | 25 to 26 | 10 (25) |
| 15/32 (12.0) | 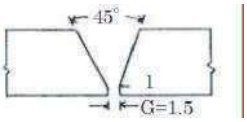 | 1 | 180 | 24 to 25 | 10 (25) |
| | | 2 | 290 | 30 to 32 | 10 (25) |

| Plate thickness t [in. (mm)] | Bevel shape | Number of layers | Current (A) | Voltage (V) | Travel speed [IPM (cm/min)] |
|---|---|---|---|---|---|
| 15/32 (12.0) | 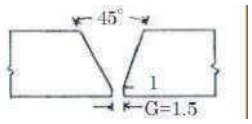  | 1 | 180 to 190 | 24 to 25 | 10 (25) |
| | | 2 | 200 | 25 to 26 | 10 (25) |
| | | 3 | 200 | 26 to 27 | 10 (25) |
| 3/4 (19.0) | 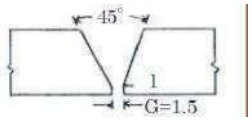  | 1 | 180 | 24 to 25 | 10 (25) |
| | | 2 | 300 | 29 to 30 | 10 (25) |
| | | 3 | 300 | 29 to 30 | 10 (25) |

Root path oscillation width: 0.1 in. (2 mm)
Number of oscillation: 120 times/min.

Example for welding conditions of single bevel groove penetration welding (STANDARD mode)

Wire diameter: .045" Φ (1.2 mmΦ)
Gas: 20 % $CO_2$ + Ar

| Bevel shape | Number of layers | Current (A) | Voltage (V) | Remarks |
|---|---|---|---|---|
| 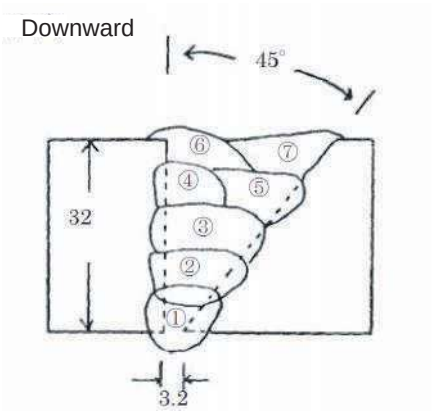  | 1 | 100 | 20 to 21 | Slight oscillation |
| | 2 | 280 | 26 to 27 | Slight oscillation |
| | 3 | 280 | 26 to 27 | Slight oscillation |
| | 4 | 280 | 26 to 27 | Slight oscillation |
| | 5 | 280 | 26 to 27 | Slight oscillation |
| | 6 | 280 | 26 to 27 | Oscillation |
| | 7 | 280 | 26 to 27 | Oscillation |
| 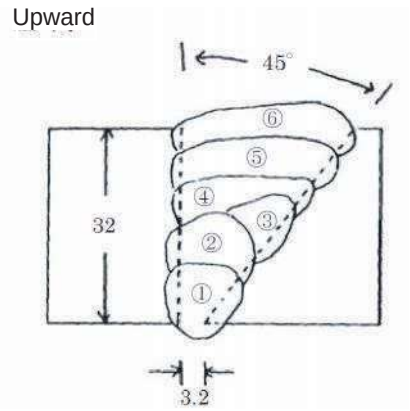  | 1 | 100 | 20 to 21 | Oscillation |
| | 2 | 130 | 21 to 22 | Oscillation |
| | 3 | 130 | 21 to 22 | Oscillation |
| | 4 | 130 | 21 to 22 | Oscillation |
| | 5 | 130 | 21 to 22 | Oscillation |
| | 6 | 120 | 19 to 20 | Oscillation |

| Bevel shape | Number of layers | Current (A) | Voltage (V) | Remarks |
|---|---|---|---|---|
| 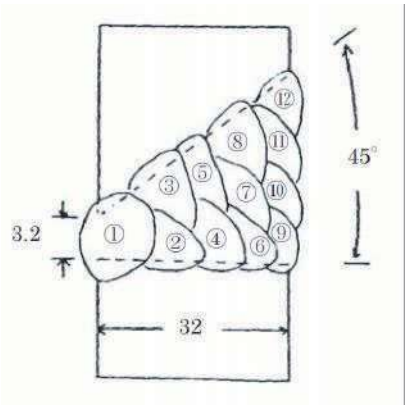 | 1 | 100 to 200 | 20 to 22 | No oscillation |
| | 2 to 8 | 200 | 24 to 25 | No oscillation |
| | 9 to 12 | 180 | 24 to 25 | No oscillation |

### 10.3.2.3 Example for welding conditions of aluminum pulse MIG

Example welding conditions of I shape butt

| Plate thickness t [in. (mm)] | Wire diameter [in. (mm) Φ] | Current (A) | Voltage (V) | Travel speed [IPM (cm/min)] | Wire feeding length [in. (mm)] | Gas flow rate [CFH (L/min)] |
|---|---|---|---|---|---|---|
| 16.5 ga. (1.5) | .045 (1.2) | 60 to 80 | 16 to 18 | 24 to 31 (60 to 80) | 0.5 to 0.6 (12 to 15) | 42 (20) |
| 14 ga. (2.0) | .045 (1.2) | 70 to 80 | 17 to 18 | 16 to 20 (40 to 50) | 0.6 (15) | 42 (20) |
| 1/8 (3.0) | .045 (1.2) | 80 to 100 | 17 to 20 | 16 to 20 (40 to 50) | 0.6 (15) | 42 (20) |
| 5/32 (4.0) | .045 (1.2) | 90 to 120 | 18 to 21 | 16 to 20 (40 to 50) | 0.6 (15) | 42 (20) |
| 15/64 (6.0) | .045 / 1/16 (1.2/1.6) | 150 to 180 | 20 to 23 | 16 to 20 (40 to 50) | 0.6 to 0.7 (15 to 18) | 42 (20) |

Example of welding conditions of horizontal fillet

| Plate thickness t [in. (mm)] | Wire diameter [in. (mm) Φ] | Current (A) | Voltage (V) | Travel speed [IPM (cm/min)] | Wire feeding length [in. (mm)] | Gas flow rate [CFH (L/min)] |
|---|---|---|---|---|---|---|
| 16.5 ga. (1.5) | .045 (1.2) | 60 to 80 | 16 to 18 | 24 (60) | 0.6 (15) | 32 to 42 (15 to 20) |
| 1/8 (3.0) | .045 (1.2) | 100 to 120 | 19 to 21 | 24 (60) | 0.6 (15) | 32 to 42 (15 to 20) |
| 15/64 (6.0) | .045 / 1/16 (1.2/1.6) | 150 to 180 | 20 to 23 | 20 to 24 (50 to 60) | 0.6 (15) | 42 (20) |

PoWer MIG Series

# GeKaMac®

**Gedik Welding Inc.**
Ankara Caddesi No: 306 Şeyhli 34906 Pendik - İstanbul / Turkey
**P.** +90 216 378 50 00 • **F.** +90 216 378 20 44
**www.**gedikwelding.com